Transport Canada Aviation
Transports Canada Aviation

(2)

TP3908E

AIRCRAFT TECHNICAL LOGS

Section 1. AIRFRAME

Second Edition

January 1987

Canada

AIRCRAFT

1.	Nationality and Registration	CANADIAN C-GYVZ
2.	Manufacturer's Designation	A 185F
3.	Manufacturer's Serial Number	185-03341
4.	Type Approval or Specification Number	3A24
5.	Date of Manufacture	1977
6.	Aircraft Inspection Cycle	

AIR TIME AND

DATE	DAILY TOTAL HRS.	DAILY TOTAL MIN.	TOTAL AIR TIME SINCE MFG. HRS.	TOTAL AIR TIME SINCE MFG. MIN.	ENGINEERING RECORD NOTE: USE BOTH PAGES AND AS MANY LINES AS REQUIRED FOR COMPLET
BROUGHT FORWARD			832	35	
16 FEB 91	-0-	-0-	832	35	AIRCRAFT WAS FOUND ~~AB~~ BY ON JAN 19/9
					INDICATED IT HAD BEEN SITTING THERE
					NEVER MOVED AFTER THAT.
					AIRCRAFT DISASSEMBLED, WINGS REMOVED
					BACK TO CANADA. 8 JAN/96
FEB 1996	-0-	-0-	832	35	A/C RECEIVED FROM ARTY'S AIR SER
					& PROP. WINGS & TAIL FEATHER, VERTICAL ST
					FACILITATE CORROSION INSPECTION & SHEET M
8 JUNE 98	-0-	-0-	832	35	THE FOLLOWING WORK WAS EMBODIED
					AIRWORTHY CONDITION:
					R/H ELEVATOR: OLD SPLICE DOES NOT CONF
					2024T3 (THOMAS INVOICE # O
					SECTION 17-51 THRU 17-54
					R/H ELEVATOR: TRAILING EDGE TORN & SPLIT;
					AS PATTERNS & EXISTING HOLES, M
					INVOICE # 013800 & 016542)
					17-54 & 17-67 THRU 17-68
					L/H ELEVATOR: SPAR DAMAGED; DISASSEMBLE EL
					2024T3 (THOMAS INVOICE # 012
					THRU 17-54 & 17-67 THRU 17-
					CONTINUED ON NEXT PAGE: (RM)
8 JUNE 98	-0-	-0-	832	35	CARRIED FORWARD

ENGINEERING RECORD

INSPECTION, REPAIRS & REPLACEMENT ENTRIES. DRAW A DIAGONAL LINE THROUGH ANY UNUSED LINES IN DATE AND TIME COLUMNS.	SIGNATURE	LICENCE NUMBER
AN AIRPORT IN ST- LUCIA. THE MECHANIC, MR ISSAKS, YEARS. HE HAD PAINTED THE AIRCRAFT IN 1992 AND IT		
R, TAIL SECTION & STABILIZER REMOVED FOR SHIPMENT SIGNATURE ILLEGIBLE		
WILLER MANITOBA. A/C RECEIVED WITH NO ENGINE HORIZONTAL STAB REMOVED. AIRCRAFT STRIPPED TO REPAIR FOR 200 HR INSP & ITRAN HERO PAINT CANADA NATHAN ROUDEAU FEB 1996		
I CERTIFY THAT THE PRECEDING IS A DUPLICATE OF THE LAST ENTRIES IN PREVIOUS JOURNEY LOG BOOK	R Roudeau	M3725JJ
TO RETURN THE AIRCRAFT TO SERVICEABLE,		
ELEVATOR DISASSEMBLED - NEW SPAR MANUFACTURED USING .032 SPAR DATA FROM D2067-13 RPC-125-9/90 CESSNA S/M SECT 17-68		
BOTTOM SKINS HAVE HAIL, ROCK & CORROSION DAMAGE; USING OLD SKINS AS AND INSTALL NEW SKINS USING .020 2024T3 (THOMAS DATA FROM D2067-13 RPC-125-9/90, CESSNA S/M SECT 17-51 THRU		
USING OLD SPAR AS PATTERN MANUFACTURE NEW SPAR USING .032 SPAR DATA D2067-13 - RPC-125-9/90 CESSNA S/M SECT. 17-51		

AIR TIME AND

DATE	DAILY TOTAL HRS.	DAILY TOTAL MIN.	TOTAL AIR TIME SINCE MFG. HRS.	TOTAL AIR TIME SINCE MFG. MIN.	ENGINEERING RECORD NOTE: USE BOTH PAGES AND AS MANY LINES AS REQUIRED FOR COMPLETE
BROUGHT FORWARD			832	35	
8 JUNE 98	0	0	832	35	L/H ELEVATOR: L/E DAMAGED & TORN; ATTACH L/E REPAIR DATA FROM D2067-13 RPC THRU 17-68.
					L/H ELEVATOR: TOP & BOTTOM SKINS HAVE ROCK, HOLES, MANUFACTURE NEW SKINS USING D2067-13-RPC-125-9/90 CESSNA
					RUDDER: LOWER L/H SKIN HAS CRACK IN & INSTALL DOUBLER - .020 2024 T3 -9/90 CESSNA S/M SECTION 17-5
					R/H FLAP: BOTTOM SKIN HAS CORROSION: MARK EXISTING RIVET HOLES. .020 2024 T3 125-9/90 CESSNA S/M SECTION
					L/H FLAP: BOTTOM OUTBOARD PATCH DOES NOT INSTALL FLUSH PATCH USING .020 2024 /90 CESSNA S/M SECT 17-47 THRU
					L/H AILERON: TOP & BOTTM INBOARD & OUT BOARD SKIN REMOVED. USING OLD SKINS AS PATTERN 2024 T3. THOMAS INVOICE #01[illegible] THRU 17-46 & 17-67 THRU 17-69
					R/H AILERON: TOP & BOTTOM, INBOARD & OUT BOARD SKIN REMOVED. USING OLD SKINS AS PATTERN .020 2024 T3 THOMAS INVOICE S/M SECTION 17-44 THRU 17-46
					CONTINUED ON NEXT PAGE
8 JUNE 98	0	0	832	35	CARRIED FORWARD

INSPECTION, REPAIRS & REPLACEMENT ENTRIES. DRAW A DIAGONAL LINE THROUGH ANY UNUSED LINES IN DATE AND TIME COLUMNS.	SIGNATURE	LICENCE NUMBER
PRT # 0734600-5 (THOMAS INVOICE # 013800)		
-9/90 CESSNA S/M SECT 17-51 THRU 17-54 & 17-67		
CORROSION DAMAGE: USING OLD SKINS FOR PATTERN & EXISTING		
2024 T3 (THOMAS INVOICE # 016542) REPAIR DATA		
SECT 17-51 THRU 17-54 & 17-67 THRU 17-68		
STRUCTION; STOP DRILL BOTH ENDS OF CRACK. MANUFACTURE		
THOMAS INVOICE # 016542). REPAIR DATA D2067-13-RPC-125		
17-54 & 17-67 THRU 17-68		
& INSTALL NEW SKIN USING OLD SKIN AS PATTERN & USING		
THOMAS INVOICE # 016542. REPAIR DATA D2067-13 RPC-		
17-47 THRU 17-50 & 17-67 THRU 17-68		
FORM: REMOVE OLD PATCH - REMOVE DAMAGED AREA (9 SQ IN)		
3 THOMAS INVOICE # 016542. REPAIR DATA D2067-13-125-9		
7-50 & 17-67 THRU 17-68.		
HAIL, ROCK & CORROSION DAMAGE. ALL DAMAGED SKINS		
EXISTING RIVET HOLES, MANUFACTURE NEW SKINS USING .020		
REPAIR DATA D2067-13 RPC-125-9/90 CESSNA S/M SECT 17-44		
HAIL, ROCK & CORROSION DAMAGE. ALL DAMAGED SKINS		
& EXISTING RIVET HOLES, MANUFACTURE NEW SKINS USING		
# 016542. REPAIR DATA D2067-13-RPC-125-9/90 CESSNA		
& 17-67 THRU 17-68		

AIR TIME AND

DATE	DAILY TOTAL HRS.	DAILY TOTAL MIN.	TOTAL AIR TIME SINCE MFG. HRS.	TOTAL AIR TIME SINCE MFG. MIN.	ENGINEERING RECORD NOTE: USE BOTH PAGES AND AS MANY LINES AS REQUIRED FOR COMPLETE
BROUGHT FORWARD			832	35	
8 JUNE 98	-0-	-0-	832	35	HORIZONTAL STAB – LOOSE RIVETS IN L/E REPLACED NUTS FOR FAIRING REPLACED – AREA PRIMED – EA-4
					VERTICAL STAB – SURFACE CORROSION REMOVED CORROSION REMOVED FROM R/H RUDDER BUSHINGS INSTALLED. – COAXIAL CABLE CONNECTOR, AFT CESSNA PARTS MANUAL FIGURE.
					L/H WING – WING PLACED IN HOLDING TO WING TIP (STA 208.00) LOWER PANEL ASSY LOWER PRT # 0523400-95 CORRODED NEW (THOMAS INVOICE #01968) ON INBRD SECTION OF REMOVED FROM AROUND STA (2) STA 118.0 PRT # 0722.9 CENTER SECTION. – ALL CORR MATERIAL LOSS – ALL AREAS 1220006-21 RE-INSTALLED. RIVET HOLES – NEW SKIN # 2250755.
					REPAIR DATA: CESSNA SERVICE
					RIVETS: CESSNA SERVICE
					CORROSION REMOVAL: AC43.
					"CONTINUED ON NEXT PAGE" (R1)
8 JUNE 98	-0-	-0-	832	35	CARRIED FORWARD

ENGINEERING RECORD

INSPECTION, REPAIRS & REPLACEMENT ENTRIES. DRAW A DIAGONAL LINE THROUGH ANY UNUSED LINES IN DATE AND TIME COLUMNS.	SIGNATURE	LICENCE NUMBER
WITH CHERRY MAX - DUMPED RIVETS REPLACED - TINNERMAN CORROSION ON FWD ATTACH POINTS & FAIRING HOLES REMOVED ELEVATOR BEARINGS INSTALLED.		
FROM AROUND L/H & R/H HORIZ STAB FAIRING SCREW HOLES - CENTER MOUNTING HOLE - AREAS PRIMED - NEW UPPER & LOWER LOWER RIB CORRODED BEYOND REPAIR AROUND ANTENA ~~MOT~~ OF FWD FIN - NEW RIB INSTALLED PRT # 0731033-1 RE: 14, ITEM #21		
FIXTURE - UPPER WING SKINS REMOVED FROM WING ROOT UPPER PANEL ASSY - WING FUEL WELL PRT # 1220006-21 REMOVED. FUEL WELL PRT # 120007-63 REMOVED. REAR SPAR ASSY BEYOND ACCEPTABLE REPAIR - SPAR ASSY REMOVED & REPLACED WITH . SURFACE CORROSION REMOVED FROM FWD LIGHTENING HOLE RIB PRT # 0721107-1 AT STATION 208.00 - CORROSION GROOVES ON WING RIBS (1.) STA 190.00 PRT # 0722198-1 (3) RIB ASSY WING FUEL BAY PRT # 0721111-21 - OUT BOARD REMOVED WAS SURFACE CORROSION WITH A MINIMUM OF WERE PRIMED. UPPER PANEL ASSY - WING FUEL WELL PRT # & OLD SKIN AS PATTERN (PRT # 0722182-13) & USING ORIGINAL THRED & INSTALLED .020 2024T3 IDEAL METALS INVOICE		
MANUAL; SECT 17-11 THRU 17-39		
: SECTION 17-68 & 17-70		
CHAPTER 6, PARA 250, SUB PARA b, & PARA 251		

AIR TIME AND

DATE	DAILY TOTAL HRS.	DAILY TOTAL MIN.	TOTAL AIR TIME SINCE MFG. HRS.	TOTAL AIR TIME SINCE MFG. MIN.	ENGINEERING RECORD NOTE: USE BOTH PAGES AND AS MANY LINES AS REQUIRED FOR COMPLETE
BROUGHT FORWARD			832	35	
8 JUNE 98	0	0	832	35	R/H WING – WING PLACED IN HOLDING FIXTURE WING TIP (STA 208.00) – UPPER FOR ACCESS TO FUEL BAY. PANEL -EXCESSIVE CORROSION ON INNER AS PATTERN, NEW SKIN MANUFACTU 22507551 – SKIN INSTALLED USING FROM MATING SURFACES – SURFAC SURFACE – SURFACE PRIMED (1.) FROM OUTBOARD SIDE AROUND CORROSION REMOVED FROM FLANGE, CORROSION REMOVED FROM STRUT CORROSION – MINIMUM LOSS OF EDGE WAS REMOVED (STA 23.625 REAR SPAR. MINUTE TRACES HOLDING FLAP TRACK TO SKIN REINSTALLED – USING RIVET HOLES, NEW SKIN MANUFA 22507551
					REPAIR DATA: CESSNA SERVICE RIVETS: CESSNA SERVICE MANUAL CORROSION REMOVAL: AC 43.13
					TAIL CONE: TAIL CONE CARRY THRU TUBES FOR POINTS ON INTERIOR FUSELAGE SK SKIN – AREAS PRIMED – HAND ON FORWARD FACE OF BULKHE PRIMED
					L/H & R/H MLG: OUTER GEARBOXS (CASTING) SHOWING CORROSION PRIMED – NEW GEARBOX UNDER P. PONK AVIATION
					CONTINUED ON NEXT PAGE RA
8 JUNE 98	0	0	832	35	CARRIED FORWARD

ENGINEERING RECORD

INSPECTION, REPAIRS & REPLACEMENT ENTRIES. DRAW A DIAGONAL LINE THROUGH ANY UNUSED LINES IN DATE AND TIME COLUMNS.	SIGNATURE	LICENCE NUMBER
UPPER WING SKINS REMOVED FROM WING ROOT TO ASSY, WING FUEL WELL PRT # 1220006-22 REMOVED. LOWER FUEL WELL PRT # 1220007-62 PEELED BACK SURFACE OF WING SKIN. SKIN REMOVED. USING OLD SKIN AS USING .032 2024 T3 (IDEAL METALS INVOICE # ORIGINAL RIVET PATTERN. - SURFACE CORROSION REMOVED PRIMED, CORROSION REMOVED FROM BUTT RIB INBOARD AT STATION 85.625 PRT # 1220019-22 - CORROSION REMOVED STRINGER FLANGES (2.) RIB STATION 190.00 PRT # 0722199-1 INBOARD SIDE OF FWD LIGHTENING HOLE. (3) SURFACE PITTING ON FWD SPAR. - ALL CORROSION WAS SURFACE MATERIAL - ALL AREAS PRIMED. SKIN LOWER TRAILING EDGE STA 100.50) TO FACILITATE INSPECTION OF APT FACE OF AFT SURFACE CORROSION ON SPAR - REMOVED & PRIMED - SCREWS LOWER SKIN FOUND CORRODED - NEW SCREWS INSTALLED - OLD SKIN AS PATTERN (PRT # 0722182-13) & ORIGINAL HOLES & INSTALLED .020 2024 T3 IDEAL METALS INVOICE #		
MANUAL: SECTION 17-11 THRU 17-39 SECTION 17-68 & 17-70 CHAPTER 6, PARA 250, SUB PARA b & PARA 251		
HAND HOLD CORRODED & CORROSION STARTING AROUND ATTACH W. - TUBE REMOVED, CORROSION REMOVED FROM TUBE & FUSELAGE HOLD CLAMP THRU TUBE REINSTALLED. - SURFACE CORROSION AD AT F.S. 209.00 - SURFACE CORROSION REMOVED - AREA		
- OUTER CASTINGS REMOVED. ~~WE~~ CORROSION REMOVED, AREA CASTING L/H PRT # PPA1301-1, R/H PPA1301-2 INSTALLED STC # SA4170NM, INVOICE # 3788		

AIR TIME AND

DATE	DAILY TOTAL HRS.	DAILY TOTAL MIN.	TOTAL AIR TIME SINCE MFG. HRS.	TOTAL AIR TIME SINCE MFG. MIN.	ENGINEERING RECORD NOTE: USE BOTH PAGES AND AS MANY LINES AS REQUIRED FOR COMPLETE
BROUGHT FORWARD	0	0	832	35	
8 JUNE 98	0	0	832	35	L/H & R/H WINGS - FLINT TIP TANKS AND OUT LINED IN STC#
					L/H & R/H WINGS - ROBERTSON STOL KIT SA1441 WE.
					ENGINE MOUNT: NEW ENGINE MOUNT PRT # OBTAINED FROM: KOSLA & # HE4R229M
					TAIL WHEEL TUBE (SLINGER): L/H & R/H BRACKET AT REMOVED - CORROSION TAIL WHEEL RE-INSTALLED
					AFT CARRY THRU SPAR: SURFACE CORROSION PRIMED
					THE MAINTENANCE DESCRIBED ABOVE HAS BEEN PERFORMED IN ACCORDANCE WITH THE APPLICABLE STANDARDS OF AIRWORTHINESS. TRANSFER JOURNEY
					AME/INSP. J. BRADEN #251780 AMO # 1790
					IO-550D ENGINE AND McCAULEY D3A IN ACCORDANCE WITH CARTER 550 STC, INC
					ONE PIECE WINDSHIELD INSTALLED I.A.W. INC. STC # SA472GL. INVOICE # 98 CABIN DOORS. BOTH L/H & R/H AFT
8 JUNE 98	0	0	833	35	"CONTINUED ON NEXT PAGE" RLH
					CARRIED FORWARD

ENGINEERING RECORD

INSPECTION, REPAIRS & REPLACEMENT ENTRIES. DRAW A DIAGONAL LINE THROUGH ANY UNUSED LINES IN DATE AND TIME COLUMNS.	SIGNATURE	LICENCE NUMBER
[illegible] HARDWARE INSTALLED AS PER INSTRUCTIONS		
[illegible] PER INSTRUCTIONS OUTLINED IN STC #		
[illegible], SER # K027 INSTALLED, TORQUED. MOUNT		
[illegible] LTD. FAA DER SO-271, FAA REPAIR STATION		
[illegible] 230.18 HAS SURFACE CORROSION - L/H & R/H BRACKETS		
[illegible] - BRACKETS PRIMED & RE-INSTALLED - STINGER RE-INSTALLED		
[illegible] LOWER EXTERIOR SURFACE - CORROSION REMOVED - AREA		
THE MAINTENANCE DESCRIBED ABOVE HAS BEEN PERFORMED IN ACCORDANCE WITH THE APPLICABLE STANDARDS OF AIRWORTHINESS. AME / INSP. [signature] # M372555 31 July 98		
[illegible] PROPELLER WITH ASSOCIATED SPINNER INSTALLED - BOJARLE AVIATION COMPANY STC # SA2933SO		
[illegible] INSTRUCTIONS OUTLINED IN GREAT LAKES AERO PRODUCTS, [illegible]. - BUBBLE WINDOWS INSTALLED IN L/H & R/H WINDOWS REPLACED WITH NEW. STC # SA00897CH		

AIR TIME AND

DATE	DAILY TOTAL HRS.	DAILY TOTAL MIN.	TOTAL AIR TIME SINCE MFG. HRS.	TOTAL AIR TIME SINCE MFG. MIN.	ENGINEERING RECORD NOTE: USE BOTH PAGES AND AS MANY LINES AS REQUIRED FOR COMPLETE
BROUGHT FORWARD	0	0	832	35	
8 JUNE 98	0	0	832	35	NUMEROUS LOOSE RIVETS ON LWR R/H BUCKED - EA 2 CHERRY RIVETS IN R/H WING INSTALLED ON L/H & R/H M.L.G. - BRAKE LINES INSTALLED ON BOTH M.L.G. LEGS - NEW BOLTS SURFACE CORROSION ON R/H CABIN DOOR HINGE CORROSION REMOVED FROM HINGES AND FUSELAGE SCREWS. SEVERAL CORRODED SCREWS, BOLTS REMOVED FROM L/H & R/H FWD LOWER CORN. FROM L/H & R/H HAND HOLDS ON FWD FUSE. REMOVAL OF CORROSION ~~AROUND~~ ON FUSELAGE. - DOOR, UPPER & LOWER HINGES REMOVED, CORROSION L/H CABIN ACCESS STEP INSTALLED - CORRODED HOLE REMOVED. - SAND VACUUMED VACUUMED & WASHED DOWN WITH VARSOL. RETAINING NUT & WASHER INSTALLED. - REAR AND .032 2024T3 DOUBLER INSTALLED. - NEW FLOOR, AFT OF F.S. 90.00. - BATTERY BOX TRIM CHANNEL AT CENTER OF F.S. 109.00 CORROSION REMOVED FROM INNER (FWD) FACE INSTALLED UNDER L/H & R/H ANTENNA MOUNTS SURFACE CORROSION REMOVED FROM VERTICAL EXTERIOR FUSELAGE SKIN AT HAND HOLDS. - RE-INSTALLED USING SOLID RIVETS. - BONDO - NIL CONTAMINATION. (PHOTO TAKEN) NEW FUEL BLADDER PRT # 1200065-3, SER # INVOICE # 19960038. NEW FUEL BLADDER HARTWIG FUEL CEL REPAIR INVOICE # 19960038
	0	0	832	35	CONTINUED ON NEXT PAGE CARRIED FORWARD

ENGINEERING RECORD

INSPECTION, REPAIRS & REPLACEMENT DRAW A DIAGONAL LINE THROUGH ANY UNUSED LINES IN DATE AND TIME COLUMNS.	SIGNATURE	LICENCE NUMBER
OF R/H WING REPLACED & /OR CORRECTLY		
SPAR REPLACED WITH SOLIDS. BRAKE CALIPERS		
, PRESSURE CHECKED & INSTALLED - BRAKE LINE CLIPS		
3-12400) INSTALLED IN BRAKE CALIPERS.		
- R/H DOOR UPPER & LOWER DOOR HINGES REMOVED,		
HINGES PRIMED AND HINGES INSTALLED WITH NEW		
FUSELAGE REPLACED WITH NEW SCREWS. — CORROSION		
WINDSHIELD RETAINING STRIP. — CORROSION REMOVED		
- L/H & R/H BRAKE LINE FITTINGS (REMOVED) TO FACILITATE		
REMOVED & FITTINGS RE-INSTALLED. — L/H CABIN		
- HINGES PRIMED AND RE-INSTALLED WITH NEW SCREWS.		
L/H FUSELAGE, ABOVE CABIN DOOR AND AROUND LIGHTENING		
FROM UNDER COCKPIT/CABIN FLOOR. - TAIL CONE ASSY		
- CABIN REAR SEAT, FWD R/H FLOOR MOUNT, NEW		
AFT R/H MOUNT, FLOOR CRACKED - CRACK STOP DRILLED		
S INSTALLED AROUND ACCESS HOLE IN R/H SIDE OF CABIN		
, NEW SOLENOID & BATTERY CABLE INSTALLED — INTERIOR		
, DOUBLER INSTALLED, CHANNEL REINSTALLED.		
BULKHEAD AT F.S. 209.00 - RE-INFORCING DOUBLER		
4 BOLTS AT VERT. STAB MOUNT POINT REPLACED (FS 209.00)		
UPPER L/E L/H & R/H SIDES. - CORROSION REMOVED FROM		
CABIN ACCESS STEP REMOVED, CORROSION REMOVED & STEP		
FROM L/H FUSELAGE AFT OF L/H REAR WINDOW		
INSTALLED IN L/H WING - HARTWIG FUEL CELL REPAIR		
# 1200065-4, SER # 412 INSTALLED IN R/H WING		

ORTLAND AIRPORT 331-4200

SERVICEABLE PART TAG

Description TACH

Manufacturer Mitchell Model D1-112-5025

IFR

IFR PRECISION INSTRUMENTS LTD.
36 AIRPORT ROAD, EDMONTON, ALBERTA
CANADA T5G 0W7

D.O.T. APPROVAL NO. 3-85

V.S.I

CUSTOMER Canadian Aero

RELEASE

IFR

IFR PRECISION INSTRUMENTS LTD.
36 AIRPORT ROAD, EDMONTON, ALBERTA
CANADA T5G 0W7

D.O.T. APPROVAL NO. 3-85

CUSTOMER Canadian Aero Industries

NOMENCLATURE Gyro Horizon

PART SERIAL MODEL

RELEASE

IFR

IFR PRECISION INSTRUMENTS LTD.
36 AIRPORT ROAD, EDMONTON, ALBERTA
CANADA T5G 0W7

D.O.T. APPROVAL NO. 3-85

CUSTOMER Canadian Aero

NOMENCLATURE ASI

RELEASE

IFR

IFR PRECISION INSTRUMENTS LTD.
36 AIRPORT ROAD, EDMONTON, ALBERTA
CANADA T5G 0W7

D.O.T. APPROVAL NO. 3-85

CUSTOMER Canadian Aero Industries

NOMENCLATURE Electric Turn Coordinator

RELEASE

IFR

IFR PRECISION INSTRUMENTS LTD.
36 AIRPORT ROAD, EDMONTON, ALBERTA
CANADA T5G 0W7

D.O.T. APPROVAL NO. 3-85

CUSTOMER Canadian Aero Industries

NOMENCLATURE Directional Gyro

RELEASE

IFR

IFR PRECISION INSTRUMENTS LTD.
36 AIRPORT ROAD, EDMONTON, ALBERTA
CANADA T5G 0W7

D.O.T. APPROVAL NO. 3-85

CUSTOMER Canadian Aero

NOMENCLATURE Altimeter

PART NUMBER 5934P-1 SERIAL NUMBER J3148 MODEL NUMBER

MFR United STATUS Test/Repair

PREVIOUS CERTIFICATE WORK ORDER NUMBER 45275 P/O NUMBER

The maintenance described has been performed in accordance with the applicable standards of airworthiness.

Jun11/98

DATE NAME OR AUTHORIZED INSPECTOR LIC. no/STAMP

IFR Precision 01 AM 03-85

MAINTENANCE RELEASE

RECORD

...INES AS REQUIRED FOR COMPLETE

CABLE, CLAMP FABRICATED
INSTALLED. — NEW TIE
BATTERY INSTALLED. — NEW
T SHIELDS FABRICATED & IN
& INSTALLED. ENGINE ENGINE
ONTAL STAB - NEW SEALS,

VERTICAL FIN PRT# 07310
FLASER UNIT PRT# 150-0011
ARGO DOOR REMOVED, LOCK
- PILOT'S DOOR LOCK CHANGED
DOOR, WINDOW LATCHES
AS INVOICE # 019208.

KS DISASSEMBLED,
NSTALLED - NEW AILERON
NSPECTED, LUBRICATED & RE-
TO CONTROL SYSTEM. TAIL
KET MANUFACTURED & INSTA

T'S DOOR CORRECTLY INSTA
OIL DIP STICK HATCH - FIT
E, CKPIT FLOOR UNDER SEAT
RIVETS REPLACED, FIRE
MANUFACTURED LINE —
OF COOLING BAFFLE, NEW

ACCESS STEP BOLTS INSTA
BOLTS INSTALLED. CLAMP
INSTALLED ON FUSELAGE —
87. - EA-4 HEAT SHIELD
MP INSTALLED
3975.
AGE" (R1)

INSPECTIO

DRAW A DIAGONAL LINE TI

IFR

IFR PRECISION INSTRUMENTS LTD.
36 AIRPORT ROAD EDMONTON ALBERTA
CANADA T5G 0W7

DOT APPROVAL NO

MAINTENANCE RELEASE

CUSTOMER CANADIAN AERO

NOMENCLATURE Magnetic Compass

PART NUMBER ______ SERIAL NUMBER ______ MODEL NUMBER ______

MFR Airpath STATUS Test&Overhaul

PREVIOUS CERTIFICATE ______ WORK ORDER NUMBER 45251 P/O NUMBER ______

The maintenance described has been performed in accordance with the applicable standards of airworthiness.

DATE June 10/98 NAME OF AUTHORIZED INSPECTOR [signature] LIC. no/STAMP IFR Precision 01

INSTALLED. NEW MASTE

RETURN SPRINGS IN

CONTACT PRT # S

ON INDUCTION TUBE

SYSTEM INSTALLED - FLOA

PLUNGER INSTALLED ON FUEL STRAINER.

THOMAS INV # 14472. - NEW BULB & FLASHER UNIT

INVOICE # 24572. - FLOAT BLOCKS INSTALLED

HANDLE CLEANED & ADJUSTED. LATCH PRIMED. DOOR

CLEANED & ADJUSTED, LATCH PRIMED - DOOR HANDLE

INSTALLED. - NEW IGNITION SWITCH INSTALLED - PRT

CLEANED, & INSPECTED. REASSEMBLED, LUBRICATED & INSTALLED.

CABLES INSTALLED - (PRAIRIE FYING SERVICE INV #'S 215888)

TO TUNNEL MOUNT. ELEVATOR PUSH/PULL TUBE

STEERING CABLES INSTALLED - TAIL WHEEL LOCK

ON BULKHEAD AT F.S. 209.00.

- OIL FILLER HATCH, CAM LOCK REPLACED, SPRING CLEANED

REMOVED, CLEANED & PRIMED & RE-INSTALLED. EA-2 CRACKS

STOP DRILLED & DOUBLER INSTALLED. RIVETS IN FLOOR

CLEANED & RIGID HYDRAULIC LINE FROM RESEVOIR TO

TUBE FITTING FOR THROTTLE BODY & FUEL PUMP

HOSE INSTALLED.

- FWD LIFT EYE BOLTS REMOVED, CLEANED, PRIMED & RE-

~~MANUFACTURED & INSTALLED FOR FUEL STRAINER DRAIN CABLE.~~ REDUNDANT ENTRY - SEE 1ST AME THIS PAGE. [signature] M372555

NEW COWL FLAP FORKS INSTALLED PRT # 1213079-1

FABRICATED, PRIMED, PAINTED & INSTALLED ON ENGINE MOUNT.

P/N 4140-00-17 RX SER # 27976. - FAA FORM 8130-3

AIR TIME AND

DATE	DAILY TOTAL HRS.	DAILY TOTAL MIN.	TOTAL AIR TIME SINCE MFG. HRS.	TOTAL AIR TIME SINCE MFG. MIN.	ENGINEERING RECORD NOTE: USE BOTH PAGES AND AS MANY LINES AS REQUIRED FOR COMPLETE
ROUGHT ORWARD	-0-	-0-	832	35	
JUNE 98	-0-	-0-	832	35	FUEL STRAINER DRAIN CABLE, CLAMP FAB[illegible] (THOMAS INV. # 019208) INSTALLED. — NEW LIFT STRUTS. NEW BATTERY INSTALLED. — 019208. — EA-6 HEAT SHIELDS FABRICATED DRESSED & TRIMMED TO FIT & INSTALLED. ENGINE TIP INSTALLED R/H HORIZONTAL STAB - NEW S[illegible]
					NEW ~~LEFT~~ (R1) TIP INSTALLED VERTICAL FIN PRT# 07[illegible] INSTALLED FOR BEACON (FLASER UNIT PRT# 150-[illegible] L/H & R/H SIDES. — CARGO DOOR REMOVED, [illegible] RE-INSTALLED & ADJUSTED. — PILOTS DOOR LOCK C[illegible] REPLACED. R/H FWD DOOR, WINDOW LATCHES # C292501-0106, THOMAS INVOICE # 019208
					ELEVATOR (STAB) TRIM JACKS DISASSEMBLED, NEW STAB TRIM CABLE INSTALLED - NEW AILERON CONTROL YOKE CLEANED, INSPECTED, LUBRICATED & INSPECTED & RE-CONNECTED TO CONTROL SYSTEM. CABLE INSTALLED. BRACKET MANUFACTURED &
					WINDOW LATCHES ON PILOT'S DOOR CORRECTLY [illegible] PRIMED & RE-INSTALLED. - OIL DIP STICK [illegible] IN INSPECTION HOLE FLANGE, CKPIT FLOOR [illegible] INSPECTED, SEVERAL COCKED RIVETS REPLACED, F[illegible] FIREWALL REPLACED WITH MANUFACTURED LINE - FITTED TO L/H AFT FACE OF COOLING BAFFLE, [illegible]
					L/H & R/H SEAT TRACK TO ACCESS STEP BOLTS I[illegible] INSTALLED. AFT LIFT EYE BOLTS INSTALLED. [illegible] WING LIFT STRUT SHIMS INSTALLED ON FUSELAGE - THOMAS INVOICE # 019687. - EA-4 HEAT S[illegible] OVERHAULED FUEL BOOST PUMP INSTALLED DUKES INC W.O. # 973975.
WE 98	-0-	-0-	832	35	*CONTINUED ON NEXT PAGE* (R1)
					CARRIED FORWARD

ENGINEERING RECORD

INSPECTION, REPAIRS & REPLACEMENT ENTRIES: DRAW A DIAGONAL LINE THROUGH ANY UNUSED LINES IN DATE AND TIME COLUMNS.	SIGNATURE	LICENCE NUMBER
INSTALLED. NEW MASTER SWITCH PRT # S1994-1-1		
[illegible] RETURN SPRINGS INSTALLED IN L/H & R/H WING		
[illegible] CONTACT PRT # S1991A1 INSTALLED (THOMAS INV #		
[illegible] ON INDUCTION TUBE RUBBER JOINTS - ENGINE BAFFLES		
[illegible] SYSTEM INSTALLED - FLOAT PLANE MUFFLER INSTALLED. - NEW		
[illegible] PLUNGER INSTALLED ON FUEL STRAINER.		
[illegible] THOMAS INV # 14472. - NEW BULB & FLASHER UNIT		
[illegible] INVOICE # 24572. - FLOAT BLOCKS INSTALLED		
[illegible], HANDLE CLEANED & ADJUSTED. LATCH PRIMED. DOOR		
[illegible] CLEANED & ADJUSTED, LATCH PRIMED - DOOR HANDLE		
[illegible] INSTALLED. - NEW IGNITION SWITCH INSTALLED - PRT		
[illegible] CLEANED, & INSPECTED. REASSEMBLED, LUBRICATED & INSTALLED.		
[illegible] CABLES INSTALLED (PRAIRIE FYING SERVICE INV #'S 215888)		
[illegible] TO TUNNEL MOUNT. ELEVATOR PUSH/PULL TUBE		
[illegible] STEERING CABLES INSTALLED - TAIL WHEEL LOCK		
[illegible] ON BULKHEAD AT F.S. 209.00.		
[illegible] - OIL FILLER HATCH, CAM LOCK REPLACED, SPRING CLEANED		
[illegible] REMOVED, CLEANED & PRIMED & RE-INSTALLED. EA-2 CRACKS		
[illegible] STOP DRILLED & DOUBLER INSTALLED. RIVETS IN FLOOR		
[illegible] CLEANED & RIGID HYDRAULIC LINE FROM RESERVOIR TO		
[illegible] TUBE FITTING FOR THROTTLE BODY & FUEL PUMP		
[illegible] HOSE INSTALLED.		
[illegible] - FWD LIFT EYE BOLTS REMOVED, CLEANED, PRIMED & RE-	REDUNDANT ENTRY - SEE 1ST AME	
~~[illegible] FACTURED & INSTALLED FOR FUEL STRAINER DRAIN CABLE.~~	THIS PAGE. [signature]	M372555
NEW COWL FLAP FORKS INSTALLED PRT # 1213079-1		
FABRICATED, PRIMED, PAINTED & INSTALLED ON ENGINE MOUNT.		
P/N 4140-00-17 RX SER # 27976. - FAA FORM 8130-3		

AIRCRAFT REGISTRATION: C-GYVZ

AIRCRAFT MODEL: C-185

AIRCRAFT SERIAL NUMBER: 185-03341

TYPE APPROVAL:

DATE: 29 July 98

AIRCRAFT OWNER: Arty's Air Service

ADDRESS: P.O. Box 1504
WINKLER, Mb
R6W 4B1

	WEIGHT	ARM	MOMENT
AIRCRAFT PREVIOUS EMPTY WEIGHT INFO: DATE: NOT AVAILABLE			
EQUIPMENT REMOVED			
AIRCRAFT WAS WEIGHTED USING WHEEL SCALES			
MODEL # PT 300; R/LG S/N 12753, L/LG S/N			
130130, T/WHEEL S/N 130130			
L/H WHEEL = 890 lbs; R/H WHEEL = 855 lbs; T/WHEEL = 180 lbs; TOTAL WEIGHT = 1925 lbs			
EQUIPMENT INSTALLED	**WEIGHT**	**ARM**	**MOMENT**
AIRCRAFT EMPTY WEIGHT	1925	39.8	76615.0
ADD OIL WITH OIL FILTER (13 QTS @ 7.5 lbs PER GALLON.	24.38	-15.0	-365.7
ADD UNUSABLE FUEL LONG RANGE TANKS 6 GALLONS @ 6 lbs PER GALLON	36.0	46.0	1656.0
ADD UNUSABLE FUEL FLIST TIP TANKS (0.4 GAL @ 6 lbs PER GALLON	0.24	34.3	8.23
TOTALS	1985.6	39.2	77835.5
$X = ARM = \frac{(A) + (T) \times (B)}{W} = X = \frac{(17") + (180 lbs) \times (243.5")}{1985.6}$ =	39.2" AFT OF DATUM		
TOTAL WEIGHT INSTALLED	1985.6	39.2	77835.5
AIRCRAFT EMPTY WEIGHT:	1985.6	39.2	77835.5
AIRCRAFT NEW USEFUL LOAD:	1614.4 lbs		
MAXIMUM ALLOWABLE GROSS WEIGHT:	3600 lbs	C of G RANGE 34.5" TO 46.5"	

I certify that this data has been prepared in accordance with the provisions of the airworthiness manual, chapter 571, section 571.211 and appendix "E", and to the best of my knowledge represents the true weight and centre of gravity of this aircraft.

SIGNED [signature] LICENCE NUMBER C/M372555 DATE: 29 July 98

F.A.A. - P.M.A.
AIRTEX PRODUCTS, INC.
NUMBER 03835
PART ☐ CARPET
PART ☐ CUSHION UPHOLSTERY
PART ☑ HEADLINER
PART ☐ WALL PANELS
PART ☐ BAGGAGE COMPARTME
PART ☐ FIREWALL COVER
PART ☐ SEAT SLINGS
ELIGIBILITY Cessna 180/18

F.A.A. - P.M.A.
AIRTEX PRODUCTS, INC.
NUMBER 0465
PART ☑ CARPET
PART ☐ CUSHION UPHOLSTERY
PART ☐ HEADLINER
PART ☐ WALL PANELS
PART ☐ BAGGAGE COMPARTMENT
PART ☐ FIREWALL COVER
PART ☐ SEAT SLINGS
ELIGIBILITY Cessna 180/185

					MONEL RIVETS INSTALLED IN UPPER & LOWER WING EA-2 4509 LANDING LIGHTS INSTALLED. – ANTENNA INSTALLED. BA 8103-1 GOULET # 5720. FAIRING FUSELAGE. NEW VACUUM FILTERS PRT # D9-
July 29/98	-0-	-0-	832	75	~~AERO PAINT CANADA HAS STRIPPED THIS AIRCRAFT~~ IAW - MIL - 3754, AIRCRAFT WO-1 ACID WASHED. APPLIED 1200S ALODINE MAX 12 HRS DRY. PRIMER GPB-913 MAX 2ML. APPLIED BASE COAT MATTERHORN #1 TRIM GOOD 42202 #2 TRIM MARROW 4221 #3 CLEAR 1010 SILVER 54435
					SIGNED [signature] DATE July 29/98
July 98	-0-	-0-	832	75	THE FOLLOWING INSTRUMENTS WERE ROUTED TO ALTIMETER PRT # 5934P-1, SER # J3148, DIRECTIONAL ELECTRIC THRU CO-ORDINATOR PRT # 13YT106-72 HORIZON PRT # 23-501-06-16 SER # T6609 D1-112-5025, SER # 6592 INSTALLED. MAGNETIC RE-INSTALLED & HOOKER CUSTOM HARNESS INSTA
					AIRCRAFT WEIGHT & BALANCE CARRIED OUT U SCALE S/N 12753, L/H MLG SCALE SER #
					AIRCRAFT NEW EMPTY WEIGHT = 1985 AIRCRAFT NEW USEFUL LOAD = 1614.4
					CONTINUED ON NEXT PAGE
			832	75	CARRIED FORWARD

DATE	DAILY TOTAL HRS.	DAILY TOTAL MIN.	TOTAL AIR TIME PAGE HRS.	TOTAL AIR TIME PAGE MIN.	ENGINEERING RECORD NOTE: USE BOTH PAGES AND AS MANY LINES AS REQUIRED FOR COMPLETE
BROUGHT FORWARD	-0-	-0-	832	35	REDUNDENT ENTRY - SEE 4th PARA PRECEDING PAGE ↓ ~~[illegible]~~ M372555
JUNE 98	-0-	-0-	832	35	~~PILOT'S WINDOW LATCHES RE-POSITIONED.~~ - L/H FOR ADEL CLAMP FABRICATED, PRIMED AND INSTALLED & CHAINS INSTALLED. - NEW QUICK DRAIN INV # 24646.
					MONEL RIVETS INSTALLED IN UPPER & LOWER WING EA-2 4509 LANDING LIGHTS INSTALLED. - ANTENNA INSTALLED. BA 8103-1 GOULET # 5720. FAIRING FUSELAGE. NEW VACUUM FILTERS PRT # D9-[illegible]
July 29/98	-0-	-0-	832	75	AERO PAINT CANADA HAS STRIPPED THIS AIRCRAFT IAW - MIL - 3754, AIRCRAFT WO-1 ACID WASHED. APPLIED 1200S ALODINE MAX 12 HRS DRY, PRIMER GPB-913 MAX 2ML. APPLIED BASE COAT MATTERHORN #1 TRIM GOLD 42202 #2 TRIM MARRON 42211 #3 CLEAR 1020 SILVER 54439
					SIGNED [signature] DATE July 29/98
July 98	-0-	-0-	832	75	THE FOLLOWING INSTRUMENTS WERE ROUTED TO ALTIMETER PRT # 5934P-1, SER # J3148, DIRECTIONAL ELECTRIC TURN CO-ORDINATOR PRT # 1394T100-72 [illegible] HORIZON PRT # 23-501-06-16 SER # T66[illegible] D1-112-5025, SER # 6592 INSTALLED. MAGNETIC RE-INSTALLED & HOOKER CUSTOM HARNESS INSTALLED
					AIRCRAFT WEIGHT & BALANCE CARRIED OUT [illegible] SCALE S/N 127531, L/H MLG SCALE SER # [illegible]
					AIRCRAFT NEW EMPTY WEIGHT = 1985[illegible] AIRCRAFT NEW USEFUL LOAD = 1614.4
					CONTINUED ON NEXT PAGE
			832	35	CARRIED FORWARD

ENGINEERING RECORD

INSPECTION, REPAIRS & REPLACEMENT ENTRIES. DRAW A DIAGONAL LINE THROUGH ANY UNUSED LINES IN DATE AND TIME COLUMNS.	SIGNATURE	LICENCE NUMBER
FUEL VENT INSTALLED, HOSE CUT TO FIT, NEW BRACKET & R/H FUEL TANK ACCESS COVERS INSTALLED. FUEL CAPS ID ENGINE OIL SUMP PRT # AE 99905G THOMAS		
STRINGER, L/H & R/H WINGS OUT BOARD OF FUEL TANKS. SEALED. NEW AIR FILTER HOUSING & NEW AIR FILTER FABRICATED AND INSTALLED AROUND ~~[illegible]~~ M.L.G. LEGS AT & B3-5-1 INSTALLED. NEW VACUUM HOSE INSTALLED.		
AERO PAINT CANADA HAS INSTALLED FABRIC _____ WHICH MEETS FAR 25.853 REQUIREMENTS. FABRIC CERTIFICATION IS MAINTAINED IN FILE UNDER WORK ORDER # 0465.		
SIGNED [signature] DATE July 29/98.		
IFR (AMO # 3-85) FOR TESTING/REPAIR & RE-INSTALLED. GYRO PRT # U 262-001-13 - (OVERHAULED) SER # ~~[illegible]~~ 40984C -192, ASI PRT # EA5172-13-CES S/N 10584, GYRO U.S.I PRT # 7000 S/N 11698. NEW TACH MODEL # COMPASS "AIRPATH" OVERHAULED (W/O. # 45251 IFR REFERS) & I.A.W. STC # SA 1643GL		
RENTED WHEEL SCALES - PRECISION SCALES INC. - R/H M.L.G. 130, T/W SCALE S/N 130130		
lbs EMPTY MOMENT = 77835.5" lbs CofG = 39.2" — MAXIMUM ALLOWABLE GROSS WEIGHT = 3600 lbs		

AIR TIME AND

DATE	DAILY TOTAL HRS.	DAILY TOTAL MIN.	TOTAL AIR TIME SINCE MFG. HRS.	TOTAL AIR TIME SINCE MFG. MIN.	ENGINEERING RECORD NOTE: USE BOTH PAGES AND AS MANY LINES AS REQUIRED FOR COMPLETE
BROUGHT FORWARD			832	35	

COMPASS SWING CARRIED OUT:

FOR:	N	030	060	E	120	150
STEER:	359	030	059	093	122	154
FOR:	S	210	240	W	300	330
STEER:	182	212	243	273	304	331

SIG: [signature] LIC. #: M372555 DATE: 31 July 98

→ SUBJECT TO SATISFACTORY TEST FLIGHT →

THE MAINTENANCE DESCRIBED ABOVE HAS BEEN PERFORMED IN ACCORDANCE WITH THE APPLICABLE STANDARDS OF AIRWORTHINESS.

AME/INSP. [signature] # M372555 31 July

DATE	DAILY TOTAL HRS.	DAILY TOTAL MIN.	TOTAL AIR TIME SINCE MFG. HRS.	TOTAL AIR TIME SINCE MFG. MIN.	ENGINEERING RECORD
31 July 98	0	0	832	35	COMPASS SWING DEFERRED; TO BE COMPLETED
31 July 98	0	0	832	35	THIS AIRCRAFT IS OPERATING WITHOUT A FLIGHT PERMIT RAR 5018 C-GYVZ, AS PRAIRIE & NORTHERN REGION, WINNIPEG AND FERRY FLIGHT TO WINKLER, MB.
31 July 98	0	5	833	0	I HAVE TEST FLOWN THIS AIRCRAFT & IT'S PERFORMANCE DOES / DOES NOT CONFORM TO THE SPECIFICATIONS OF IT'S TYPE.
31 July 98	0	0	833	0	COMPASS SWING CARRIED OUT AFTER PAGE
					CARRIED FORWARD

ENGINEERING RECORD

INSPECTION, REPAIRS & REPLACEMENT ENTRIES. DRAW A DIAGONAL LINE THROUGH ANY UNUSED LINES IN DATE AND TIME COLUMNS.	SIGNATURE	LICENCE NUMBER

I HAVE CONDUCTED AN INDEPENDENT INSPECTION ON THE TYPE OF FLIGHT/~~POWER PLANT~~ CONTROLS AFFECTED BY THE WORK ACCOMPLISHED.

SIG: [signature] LIC. # P36168 DATE: July 31/98

I HAVE CONDUCTED AN INDEPENDENT INSPECTION ON THE TYPE OF FLIGHT/~~POWER PLANT~~ CONTROLS AFFECTED BY THE WORK ACCOMPLISHED.

SIG: [signature] LIC. # M372555 DATE: 31 July 98

I HAVE CONDUCTED AN INDEPENDENT INSPECTION ON THE TYPE OF FLIGHT/POWER PLANT CONTROLS AFFECTED BY THE WORK ACCOMPLISHED.

SIG: [signature] LIC. # P36168 DATE: July 31/98

I HAVE CONDUCTED AN INDEPENDENT INSPECTION ON THE TYPE OF FLIGHT/POWER PLANT CONTROLS AFFECTED BY THE WORK ACCOMPLISHED.

SIG: [signature] LIC. # M372555 DATE: 31 July 98

AFTER TEST FLIGHT; TO FACILITATE ENGINE BREAK IN.

VALID CERTIFICATE OF AIRWORTHINESS. OPERATION UNDER [illegible] BY TRANSPORT CANADA, MAINTENANCE & MANUFACTURING, OFFICE - FLIGHT PERMIT IS VALID FOR TEST FLIGHTS

THE MAINTENANCE DESCRIBED ABOVE HAS BEEN PERFORMED IN ACCORDANCE WITH THE APPLICABLE STANDARDS OF AIRWORTHINESS.

AME / INSP. [signature] # C/M372555 31 July 98

Jet Pacthan

TEST FLIGHT. RESULTS RECORDED ON PREVIOUS

THE MAINTENANCE DESCRIBED ABOVE HAS BEEN PERFORMED IN ACCORDANCE WITH THE APPLICABLE STANDARDS OF AIRWORTHINESS.

AME / INSP. [signature] # M372555

Transport Canada
Safety and Security

Transports Canada
Sécurité et sûreté

CONFORMITY CERTIFICATE — REPAIR OR MODIFICATION
CERTIFICAT DE CONFORMITÉ — RÉPARATION OU MODIFICATION

INSTRUCTIONS

FOR INSTRUCTION, SEE AIRWORTHINESS MANUAL CHAPTER 571 APPENDIX L - POUR LES INSTRUCTIONS CONSULTER LEMANUEL DE NAVIGABILITÉ CHAPITRE 571 APPENDICE L.
PRINT OR TYPE - DACTYLOGRAPHIER OU ÉCRIRE EN LETTRES MOULÉES

1. AIRCRAFT / AÉRONEF	MAKE - CONSTRUCTION: CESSNA	MODEL - MODÈLE: 185
	SERIAL NO. - N° DE SÉRIE: 185-03341	REGISTRATION MARKS - MARQUES D'IMMATRICULATION: GVVZ
2. OWNER / PROPRIÉTAIRE	NAME - NOM: ART PETKAU	ADDRESS - ADRESSE: WINKLER, M.B

* **3. UNIT IDENTIFICATION / IDENTITÉ DE L'UNITÉ**	UNIT - UNITÉ	MANUFACTURER - CONSTRUCTEUR	**4. TYPE OF WORK - GENRE DE TRAVAIL**
	MODEL - MODÈLE	SERIAL NO. - N° DE SÉRIE	☐ MODIFICATION ☑ REPAIR / RÉPARATION

* USE A SEPARATE FORM FOR EACH UNIT BEING CERTIFIED - UTILISER UN FORMULAIRE SÉPARÉ POUR CHAQUE UNITÉ CERTIFIÉE

5. CONFORMITY STATEMENT / DÉCLARATION DE CONFORMITÉ

I CERTIFY THAT THE WORK DETAILED ON THE REVERSE SIDE OF THIS SHEET HAS BEEN ACCOMPLISHED IN ACCORDANCE WITH DATA EITHER APPROVED BY OR SPECIFIED BY THE MINISTER, AND SO INDICATED ON THE REVERSE SIDE.

JE CERTIFIE QUE LE TRAVAIL DÉCRIT AU VERSO DE CE FORMULAIRE A ÉTÉ EFFECTUÉ SELON DES DONNÉES QUI ONT ÉTÉ APPROVÉES OU SPÉCIFIÉES PAR LE MINISTRE TEL QU'INDIQUÉ AU RECTO.

SIGNATURE (AUTHORIZED PERSON - PERSONNE AUTORISÉE)	AME LICENCE OR AMO APPROVAL NO. / N° DE LICENCE DU TEA OU D'AGRÉMENT DE L'OMA	DATE
	AMO # 84-98	23/04/01

ADDRESS - ADRESSE: MORDEN, M.B

CATEGORY - CATÉGORIE: S-33

6. CERTIFICATION

THE MAINTENANCE REQUIRED TO INSTALL THIS COMPONENT ON THE AIRCRAFT STATED ABOVE HAS BEEN PERFORMED IN ACCORDANCE WITH THE APPLICABLE STANDARDS OF AIRWORTHINESS.

LA MAINTENANCE REQUISE POUR INSTALLER LE COMPOSANT SUR L'AÉRONEF MENTIONÉ CI-HAUT A ÉTÉ EXÉCUTÉE CONFORMÉMENT AUX NORMES DE NAVIGABILITÉ APPLICABLES.

SIGNATURE (AUTHORIZED PERSON - PERSONNE AUTORISÉE)	AME LICENCE OR AMO APPROVAL NO. / N° DE LICENCE DU TEA OU D'AGRÉMENT DE L'OMA	DATE
	M338325	23/04/01

ADDRESS - ADRESSE: MORDEN, M.B

CATEGORY - CATÉGORIE: M2

7. FOR DEPARTMENT OF TRANSPORT OR APPROVED MAINTENANCE ORGANIZATION USE / RÉSERVÉ AU MINISTÈRE DES TRANSPORTS OU AUX ORGANISMES DE MAINTENANCE AGRÉÉS

CERTIFICATION OF AERONAUTICAL PRODUCTS BEING RETURNED TO FOREIGN CUSTOMERS.

CERTIFICATION DE PRODUITS AÉRONAUTIQUES RETOURNÉS AUX CLIENTS D'ORIGINE ÉTRANGÈRE.

AIRWORTHINESS OR AUTHORIZED INSPECTOR / INSPECTEUR AUTORISÉ OU DE NAVIGABILITÉ	REGION DISTRICT OR ORGANIZATION / RÉGION DISTRICT OU ORGANISATION	STAMP / DATE - ESTAMPILLE / DATE

WEIGHT AND BALANCE OR OPERATING LIMITATION CHANGES SHALL BE ENTERED IN THE APPROPRIATE AIRCRAFT RECORDS. A MODIFICATION MUST BE COMPATIBLE TO ALL PREVIOUSLY INCORPORATED MODIFICATIONS TO ASSURE CONTINUED CONFORMITY WITH THE APPLICABLE AIRWORTHINESS REQUIREMENTS.

LES CHANGEMENTS DE MASSE ET CENTRAGE OU DE LIMITES D'UTILISATION DOIVE ÊTRE TRANSCRITS DANS LES DOSSIERS APPROPRIÉS DE L'AÉRONEF. UNE MODIFICATI DOIT ÊTRE COMPATIBLE AVEC LES MODIFICATIONS PRÉCÉDEMMENT INCORPORÉES PO ASSURER LA CONFORMITÉ AUX NORMES DE NAVIGABILITÉ APPLICABLES.

8. DESCRIPTION OF WORK ACCOMPLISHED
(IF MORE SPACE IS REQUIRED ATTACH ADDITIONAL SHEETS - IDENTIFY WITH AIRCRAFT NATIONALITY AND REGISTRATION MARKS AND DATE WORK COMPLETED.)

DESCRIPTION DES TRAVAUX EXÉCUTÉS
(AU BESOIN, UTILISER DES FEUILLES SUPPLÉMENTAIRES - INDIQUER SUR CHAQ FEUILLE, LES MARQUES DE NATIONALITÉ ET D'IMMATRICULATION DE L'AERONEF ET DATE À LAQUELLE LES TRAVAUX ONT ÉTÉ COMPLÉTES.)

THE FOLLOWING REPAIRS COMPLETED AFTER AIRCRAFT SUSTAINED DAMAGE WHILE CHANGE-OVER OF GEAR WAS BEING CARRIED OUT.
WORKSHEET "YVZ 01-01-01" REFERS.

- EXHAUST REPAIRED (AIRLAB #1455)
- firewall replaced with new part
- Motor mount magnafluxed
- engine run out checked ok.
- LWR. ENGINE COWL SKINS REPLACED
- L.H & R.H WINGS REPAIRED BY BLACKHURST AVIATION (BISTROON INV.# 308)
- AILERON CABLES REPLACED WITH NEW CABLES
- REPLACED L.H & R.H FUSELAGE SKINS (STN. 0 → 18.0")
- REPLACED BELLY SKIN WITH NEW SKIN (STN 0 → 23.25")
- REPLACED LWR DOOR SILL SKINS WITH NEW SKIN (STN 22.00 → 65.33")
- REPLACED FWD GEAR BOX BULKHEAD SKIN WITH NEW PART
- REPLACED AFT OF DOOR FRAME SKINS WITH NEW SKIN [(L+R) STN. 65.33 → 90.0"]
- REPLACED LWR FIREWALL STIFFENERS WITH NEW PARTS
- WING ATTACH BOLTS REPLACED WITH NEW BOLTS.
- PROP RE-INSTALLED AFTER O.HAUL BY CND. PROPELLER. W/O # C5955.

☐ WEIGHT AND BALANCE / MASSE ET CENTRAGE
☐ INDEPENDENT CONTROL CHECK / VÉRIFICATION INDÉPENDANTE DES COMMANDES
☐ TECHNICAL RECORD ENTRIES / INSCRIPTIONS AU DOSSIER TECHNIQUE

CONFORMITY CERTIFICATE — CERTIFICAT DE CONFORMITÉ
REPAIR OR MODIFICATION — RÉPARATION OU MODIFICATION

INSTRUCTIONS

FOR INSTRUCTION, SEE AIRWORTHINESS MANUAL ADVISORY 575.219 - POUR LES INFORMATIONS, CONSULTER LA CIRCULAIRE CONSULTATIVE AU MANUEL DE NAVIGABILITÉ 575.219.
PRINT OR TYPE - DACTYLOGRAPHIER OU ÉCRIRE EN LETTRES MOULÉES

1. AIRCRAFT — AÉRONEF

MAKE - CONSTRUCTEUR	MODEL - MODÈLE
CESSNA	A 185 F
SERIAL NO. - N° DE SÉRIE: 185-03341	REGISTRATION MARKS - MARQUES D'IMMATRICULATION: C-GYVZ

2. OWNER — PROPRIÉTAIRE

NAME - NOM	ADDRESS - ADRESSE
ART PAETKAU	Box 1054 WINKLER MB R6W 4B1

3. UNIT IDENTIFICATION — IDENTITÉ DE L'UNITÉ

UNIT - UNITÉ	MANUFACTURER - CONSTRUCTEUR	4. TYPE OF WORK - GENRE DE TRAVAIL
BLIND ENCODER	TRANS CAL	☑ MODIFICATION ☐ REPAIR / RÉPARATION
MODEL - MODÈLE: SSD 120	SERIAL NO. - N° DE SÉRIE: 537446	

USE A SEPARATE FORM FOR EACH UNIT BEING CERTIFIED - UTILISER UN FORMULAIRE SÉPARÉ POUR CHAQUE UNITÉ CERTIFIÉE

5. CONFORMITY STATEMENT — DÉCLARATION DE CONFORMITÉ

I CERTIFY THAT THE WORK DETAILED ON THE REVERSE SIDE OF THIS SHEET HAS BEEN ACCOMPLISHED IN ACCORDANCE WITH APPROVED DATA SPECIFIED THEREIN.

JE CERTIFIE QUE LE TRAVAIL DÉCRIT AU VERSO DE CE FORMULAIRE A ÉTÉ EFFECTUÉ SELON LES MÉTHODES HOMOLOGUÉES QUI Y SONT MENTIONNÉES.

W G W 24836

SIGNATURE (AUTHORIZED PERSON - PERSONNE AUTORISÉE)	AME LICENCE OR AMO APPROVAL NO. N° DE LICENCE DU TEA OU D'APPROBATION DE L'AMO	DATE: NOV 3/98
ADDRESS - ADRESSE	CATEGORY - CATÉGORIE	

4836

6. CERTIFICATION

THE MAINTENANCE REQUIRED TO INSTALL THIS COMPONENT ON THE AIRCRAFT STATED ABOVE HAS BEEN PERFORMED IN ACCORDANCE WITH THE APPLICABLE STANDARDS OF AIRWORTHINESS.

LA MAINTENANCE REQUISE POUR INSTALLER LE COMPOSANT SUR L'AÉRONEF MENTIONNÉ CI-HAUT A ÉTÉ EXÉCUTÉE CONFORMÉMENT AUX NORMES DE NAVIGABILITÉ APPLICABLES.

W G W 24836

SIGNATURE (AUTHORIZED PERSON - PERSONNE AUTORISÉE)	AME LICENCE OR AMO APPROVAL NO. N° DE LICENCE DU TEA OU D'APPROBATION DE L'AMO	DATE: NOV 3/98
ADDRESS - ADRESSE	CATEGORY - CATÉGORIE	

7. FOR DEPARTMENT OF TRANSPORT OR APPROVED MAINTENANCE ORGANIZATION USE — RÉSERVÉ AU MINISTÈRE DES TRANSPORTS OU AUX ORGANISMES DE MAINTENANCE AGRÉÉS

CERTIFICATION OF AERONAUTICAL PRODUCTS BEING RETURNED TO FOREIGN CUSTOMERS.

CERTIFICATION DE PRODUITS AÉRONAUTIQUES RETOURNÉS AUX CLIENTS D'ORIGINE ÉTRANGÈRE.

AIRWORTHINESS OR AUTHORIZED INSPECTOR - INSPECTEUR AUTORISÉ OU DE NAVIGABILITÉ	REGION DISTRICT OR ORGANIZATION - RÉGION DISTRICT OU ORGANISATION	STAMP / DATE - ESTAMPILLE / DATE

Canada

WEIGHT AND BALANCE OR OPERATING LIMITATION CHANGES SHALL BE ENTERED IN THE APPROPRIATE AIRCRAFT RECORDS. A MODIFICATION MUST BE COMPATIBLE TO ALL PREVIOUSLY INCORPORATED MODIFICATIONS TO ASSURE CONTINUED CONFORMITY WITH THE APPLICABLE AIRWORTHINESS REQUIREMENTS.

LES CHANGEMENTS DE MASSE ET CENTRAGE OU DE LIMITES D'UTILISATION DOIVENT ÊTRE TRANSCRITS DANS LES DOSSIERS APPROPRIÉS DE L'AÉRONEF. UNE MODIFICATION DOIT ÊTRE COMPATIBLE AVEC LES MODIFICATIONS PRÉCÉDEMMENT INCORPORÉES POUR ASSURER LA CONFORMITÉ AUX NORMES DE NAVIGABILITÉ APPLICABLES.

8. DESCRIPTION OF WORK ACCOMPLISHED
(IF MORE SPACE IS REQUIRED ATTACH ADDITIONAL SHEETS - IDENTIFY WITH AIRCRAFT, NATIONALITY AND REGISTRATION MARKS AND DATE WORK COMPLETED.)

DESCRIPTION DES TRAVAUX EXÉCUTÉS
(AU BESOIN, UTILISER DES FEUILLES SUPPLÉMENTAIRES - INDIQUER SUR CHAQUE FEUILLE, LES MARQUES D'IMMATRICULATION DE L'AÉRONEF ET LA DATE À LAQUELLE LES TRAVAUX ONT ÉTÉ EFFECTUÉS.)

SSD 120 BLIND ENCODER INSTALLED PER SK40-00176 & TRANS CAL DOC # M881000D

INSTALLED GARMIN 250 GPS PER GARMIN MANUAL - 190-00067-62.

INSTALLED PM2000 INTERCOM PER P.S. ENGINEERING DOC # 01269401.

ALL WIRING TO MIL-W-22759/16 & MIL-W-27500.

ADDED TWO CIRCUIT BREAKER 2AMP EACH FOR I/C & GPS.

STATIC LEAK TEST PER
AIRWORTHINESS MANUAL CHAP 571
APPENDIX D
DATE NOV 3/98 **SIGN** [signature] **LIC. #** W G M 24836

TRANSPONDER TESTED PER E & I
MANUAL PART II CHAP III SEC. 3.14.3.2
DATE NOV 3/98 **SIGN** [signature] **LIC. #** W G M 24836

	WEIGHT			MOMENT
PM2000 I/C	— 1.0 lbs	—	16	16.0
GPS 250	— 2.5 lbs	—	16	40.0
SSD 120	— 0.5	—	12	6.0

ADD THESE TO EQUIP LIST WHEN A/C IS TO BE WEIGHT.

☐ WEIGHT AND BALANCE / MASSE ET CENTRAGE
☐ INDEPENDENT CONTROL CHECK / VÉRIFICATION INDÉPENDANTE DES COMMANDES
☑ LOG BOOK ENTRIES / INSCRIPTIONS AU CARNET D'AÉRONEF
☐ ELECTRICAL LOAD ANALYSIS / CALCUL DES CHARGES ÉLECTRIQUES
☐ TEST FLIGHT / ESSAI EN VOL
☐ ADDITIONAL SHEETS ATT...

AIR TIME AND

DATE	DAILY TOTAL HRS.	DAILY TOTAL MIN.	TOTAL AIR TIME SINCE MFG. HRS.	TOTAL AIR TIME SINCE MFG. MIN.	ENGINEERING RECORD NOTE: USE BOTH PAGES AND AS MANY LINES AS REQUIRED FOR COMPLETE
BROUGHT FORWARD			833.	0	
/98	~~5.3~~		~~838~~	0	#1 Com WIRING Repaired Between
	3.3		841.	0	Com 1 & AUDIO PANEL.
					INSTALLED GPS 350 Pn GARMIN
					MANUAL 190-00067-62
					INSTALLED SSD 120 BLIND ENCODER
					PER STC SK40-00176 AND DOC # M881000D
					INSTALLED PM200 I/C By PS ENGINEERING
					DOC # 01269401
					CONFORMITY CERTIFICATE COMPLETED
29-99			~~838~~ 0		BOTH AILERONS REMOVED TO
			844	3	SURFACES. RE-BALANCED AND FOUND
					SERVICE MANUAL 17-3 & WORKSHEET
28-00	48.	7	~~886~~ 7		ANNUAL INSPECTION COMPLETED
			893	0	CHECK SHEET "YVZ-28-01-00"
					WORK DONE FOUND ON ATTACHED
REV 27/01	29.6		922.	6	ANNUAL INSPECTION CARRIED OUT AS PER AWM CHAPTER 571 C APPENDIX "A" CHECK SHEET YVZ 01-A-01 DETAILS OF ADDITIONAL WORK FOUND ON ATTACHED WORKSHEET
	31.6		954	.2	
20 2002	ANNUAL INSPECTION COMPLETED - OIL CHANGED, 20/50 Phillips				
10 03	ANNUAL INSPECTION COMPLETED AS PER CARS 625 APP. B.				
	OIL CHANGED RUN UP OK				
			995	4	CARRIED FORWARD

LOG BOOK ENTRIES
INSCRIPTIONS AU CARNET D'AÉRONEF

ADDITIONAL SHEETS AT

INDEPENDENT CONTROL CHECK
VÉRIFICATION INDÉPENDANTE DES COMMANDES

TEST FLIGHT
ESSAI EN VOL

ELECTRICAL LOAD ANALYSIS
CALCUL DES CHARGES ÉLECTRIQUES

MASSE ET CENTRAGE

INSPECTION, REPAIRS & REPLACEMENT ENTRIES. DRAW A DIAGONAL LINE THROUGH ANY UNUSED LINES IN DATE AND TIME COLUMNS.	SIGNATURE	LICENCE NUMBER
STATIC LEAK TEST PER AIRWORTHINESS MANUAL CHAP 571 APPENDIX D DATE NOV 3/98 SIGN [signature] LIC. # W.G.M. 244836		
TRANSPONDER TESTED PER E & I MANUAL PART II CHAP III SEC. 3.14.3.2 DATE NOV 3/98 SIGN [signature] LIC. # W.G.M. 244836		
RE-WEIGHED. BOTH CONTROL TO BE WITHIN LIMITS IAW CESSNA WZ 29-01-99 refers.	[signature] W.G.M. 244836	M338325
AS PER INSPECTION DETAILS OF ADDITIONAL WORK SHEET.	THE MAINTENANCE DESCRIBED HAS BEEN PERFORMED IN ACCORDANCE WITH APPLICABLE STANDARDS OF AIRWORTHINESS SIGNATURE [signature] TTAF 886.7 LICENCE No. M338325 DATE 28-01-00	
WORKSHEET H10 FLOATS INSTALLED AT THIS TIME. TESTED SATISFACTORY.	THE MAINTENANCE DESCRIBED HAS BEEN PERFORMED IN ACCORDANCE WITH APPLICABLE STANDARDS OF AIRWORTHINESS SIGNATURE [signature] TTAF 922.6 LICENCE No. M338325 DATE APRIL 2301	
MAINTENANCE DESCRIBED HAS BEEN PERFORMED IN ACCORDANCE WITH APPLICABLE STANDARDS OF AIR WORTHINESS	[signature]	M338535
THE MAINTENANCE DESCRIBED HAS BEEN PERFORMED IN ACCORDANCE WITH APPLICABLE STANDARDS OF AIRWORTHINESS.	[signature]	M338535

AIR FAB 2000 LTD.

D.O.T. APPROVED AMO #45-90

#23-1865 SARGENT AVE.
WINNIPEG, MB, CANADA
R3H 0E4

PH: (204) 775-3708

Our Business Is Exhausting

MAINTENANCE RELEASE

Nomenclature: Ex. Stack Collector with Riser

Manufacturer: Cessna | Type/Model: 185

Part No.: 0750238-210 | Serial No.: AIR 1455B

Total Time: | Work Order: 1455

Overhaul ☐ Repair ☑ Modification ☐ Removal ☐

Previous Certification

The maintenance described has been performed in accordance with the applicable standards of airworthiness

Jan 23/01 — DATE

AME OR AUTHORIZED INSPECTOR

AIR FAB 3 2000 — LIC. No./STAMP

Details of outstanding work and other information on reverse.

AIR FAB 2000 LTD.

D.O.T. APPROVED AMO #45-90

#23-1865 SARGENT AVE.
WINNIPEG, MB, CANADA
R3H 0E4

PH: (204) 775-3708

Our Business Is Exhausting

MAINTENANCE RELEASE

Nomenclature: Ex. Stack Collector with Riser

Manufacturer: Cessna | Type/Model: 185

Part No.: 0750238-210 | Serial No.: AIR 1455C

Total Time: | Work Order: 1455

Overhaul ☐ Repair ☑ Modification ☐ Removal ☐

Previous Certification

The maintenance described has been performed in accordance with the applicable standards of airworthiness

Jan 23/01 — DATE

AME OR AUTHORIZED INSPECTOR

AIR FAB 3 2000 — LIC. No./STAMP

Details of outstanding work and other information on reverse.

AIR FAB 2000 LTD.

D.O.T. APPROVED AMO #45-90

#23-1865 SARGENT AVE.
WINNIPEG, MB, CANADA
R3H 0E4

PH: (204) 775-3708

Our Business Is Exhausting

MAINTENANCE RELEASE

Nomenclature: Muffler

Manufacturer: Cessna | Type/Model: 185

Part No.: 0750161-28 | Serial No.: AIR 1455A

Total Time: | Work Order: 1455

Overhaul ☐ Repair ☑ Modification ☐ Removal ☐

Previous Certification

The maintenance described has been performed in accordance with the applicable standards of airworthiness

Jan 23/01 — DATE

AME OR AUTHORIZED INSPECTOR

AIR FAB 3 2000 — LIC. No./STAMP

Details of outstanding work and other information on reverse.

INSTALLATION RECORD

DATE	AIRCRAFT

POSITION

A/F TIME	CYCLES/LSN

REPLACED UNIT SERIAL No.

SIGNATURE

SNAG number

REMARKS

Details of work performed / reason for removal

Replace outlet pipe, weld in patch, replace both ends. Pressure test @ (4PSI) OK CSM

Additional work to be performed upon installation

INSTALLED ON

DATE

MAINTENANCE RELEASE

INSTALLATION RECORD

DATE	AIRCRAFT

POSITION

A/F TIME	CYCLES/LSN

REPLACED UNIT SERIAL No.

SIGNATURE

SNAG number

REMARKS

Details of work performed / reason for removal

Weld repair as required Replace beaded end.

Additional work to be performed upon installation

INSTALLED ON

DATE

MAINTENANCE RELEASE

INSTALLATION RECORD

DATE	AIRCRAFT

POSITION

A/F TIME	CYCLES/LSN

REPLACED UNIT SERIAL No.

SIGNATURE

SNAG number

REMARKS

Details of work performed / reason for removal

Inspect, clean, fluorescent repair as required + re-certify.

Additional work to be performed upon installation

INSTALLED ON

DATE

MAINTENANCE RELEASE

AERO RECIP (CANADA) LTD.

540 Marjorie Street
Winnipeg, Manitoba R3H 0S9
Fax (204) 786- 2775
Telephone (204) 788-4765
AMO No. 45 - 89

MAINTENANCE RELEASE

Nomenclature Engine Mount

Manufacturer Cessna Type/Model Cessna 185

Part No. 075-1003-31 Serial No. b52289

Total Time Work Order 0101107

New ☐ Overhaul ☐ Repair ☐ Modification ☐ Removal ☐ Receiving Inspection ☐

Source / Traceability Magnaflux Only

The maintenance described has been performed in accordance with the applicable standards of airworthiness.

JAN 16 2001 (DATE)

(NAME OF AUTHORIZED INSPECTOR)

AMC 13 INSP (LIC.No./STAMP)

ARC62A

Details of outstanding work and other information on reverse.

HARTWIG AIRCRAFT FUEL CELL REPAIR

PH. (204) 668-3234

WINNIPEG - ST. ANDREWS AIRPORT
512 AIRLINE ROAD, UNIT 101
ST. ANDREWS, MANITOBA R1A 3P3

D.O.T. APPROVAL #110-90

MAINTENANCE RELEASE

NOMENCLATURE Cessna 180 - 185 LH

PART No. 1200065-3 SERIAL No. 674

Type/Model 201/20000-5 Date Mfg. Aug/1995

Manufacturer Aerotech

Work Order No. 19950596

NEW [X] REPAIR ☐ MODIFICATION ☐ SHOP CHECK ☐

Previous Certification

The maintenance described has been performed in accordance with the applicable standards of airworthiness.

JAN 30 1996 (Date)

AUTHORIZED INSPECTOR

Installed QB

HARTWIG AIRCRAFT FUEL CELL REPAIR

PH. (204) 668-3234

WINNIPEG - ST. ANDREWS AIRPORT
512 AIRLINE ROAD, UNIT 101
ST. ANDREWS, MANITOBA R1A 3P3

D.O.T. APPROVAL #110-90

MAINTENANCE RELEASE

NOMENCLATURE Cessna 180 - 185 RH

PART No. 1200065-4 SERIAL No. 412

Type/Model 201 Date Mfg. Feb/1992

Manufacturer Aerotech

Work Order No. 19950554

NEW [X] REPAIR ☐ MODIFICATION ☐ SHOP CHECK ☐

Previous Certification

The maintenance described has been performed in accordance with the applicable standards of airworthiness.

JAN 30 1996 (Date)

AUTHORIZED INSPECTOR

MAINTENANCE RELEASE

ACCESSORY MODIFICATIONS & A.W.DS.

Found Embodied .....

.....

Embodied at O/H .....

.....

Prior to the initial start, following the installation, all Pratt & Whitney engines must be pre-oiled in accordance with the instructions supplied in the log book or as recommended in the maintenance manual. All other engines should be pre-oiled as per the manufacturers' recommendations.

STORAGE AND INSPECTION

1 — Store at room Temp., in original shipping container.
2 — If cell is removed from shipping container for inspection, it should be replaced in case in as nearly the original folding as possible.
3 — Inspect cell every 6-9 month in storage to insure the cell is still inhibited. If cell appears dry, work in with a clean rag a light coat inside and out of 5-10 wt. oil **Non-detergent** Repeat # 2

Storage Inspection Record #1 ..... #2 .....

#3 ..... #4 ..... #5 .....

A.D.'s or Bulletins: .....

INSTALLED ON A/C ..... DATE .....

MAINTENANCE RELEASE

STORAGE AND INSPECTION

1 — Store at room Temp., in original shipping container.
2 — If cell is removed from shipping container for inspection, it should be replaced in case in as nearly the original folding as possible.
3 — Inspect cell every 6-9 month in storage to insure the cell is still inhibited. If cell appears dry, work in with a clean rag a light coat inside and out of 5-10 wt. oil **Non-detergent** Repeat # 2

Storage Inspection Record #1 ..... #2 .....

#3 ..... #4 ..... #5 .....

A.D.'s or Bulletins: .....

INSTALLED ON A/C ..... DATE .....

MAINTENANCE RELEASE

Airfab
A.I.R. FABRICATION & WELDING
D.O.T. APPROVAL No. 45-90

Nomenclature: EXHAUST COLLECTOR
Manufacturer: CESSNA — Type/Model: 185
Part No.: 0750238-210 — Serial No.: A1182418
Total Time: N/A — Work Order: 1896
Overhaul ☐ Repair ☒ Modification ☐ Removal ☐
Previous Certification: N.P

The maintenance described has been performed in accordance with the applicable standards of airworthiness.

2/12/97 — DATE
AME OR AUTHORIZED INSPECTOR
LIC. No./STAMP
Details of outstanding work and other information on reverse.

MAINTENANCE RELEASE

Airfab
A.I.R. FABRICATION & WELDING
D.O.T. APPROVAL No. 45-90

Nomenclature: EXHAUST COLLECTOR
Manufacturer: CESSNA — Type/Model: 185
Part No.: 0750238-210 — Serial No.: A1182417
Total Time: N/A — Work Order: 1895
Overhaul ☐ Repair ☒ Modification ☐ Removal ☐
Previous Certification: N.P

The maintenance described has been performed in accordance with the applicable standards of airworthiness.

2/12/97 — DATE
AME OR AUTHORIZED INSPECTOR
LIC. No./STAMP
Details of outstanding work and other information on reverse.

MAINTENANCE RELEASE

Airfab
A.I.R. FABRICATION & WELDING
D.O.T. APPROVAL No. 45-90

Nomenclature: HEAT MUFF (FLOAT PLANE STYLE)
Manufacturer: CESSNA? — Type/Model: 185
Part No.: 0750161-28 MOD — Serial No.: A1182416
Total Time: N/A — Work Order: 1894
Overhaul ☐ Repair ☒ Modification ☐ Removal ☐
Previous Certification: N.P

The maintenance described has been performed in accordance with the applicable standards of airworthiness.

2/12/97 — DATE
AME OR AUTHORIZED INSPECTOR
LIC. No./STAMP
Details of outstanding work and other information on reverse.

MAINTENANCE RELEASE

INSTALLATION RECORD

DATE	AIRCRAFT
POSITION	
A/F TIME	CYCLES/LSN
REPLACED UNIT SERIAL No.	
SIGNATURE	
SNAG No.	

REMARKS

Details of work performed / reason for removal

CLEANED, REPAIRED & PRESSURE TESTED

Additional work to be performed upon installation

INSTALLED ON .....

DATE .....

MAINTENANCE RELEASE

INSTALLATION RECORD

DATE	AIRCRAFT
POSITION	
A/F TIME	CYCLES/LSN
REPLACED UNIT SERIAL No.	
SIGNATURE	
SNAG No.	

REMARKS

Details of work performed / reason for removal

CLEANED, SERVICED & REPAIRED

Additional work to be performed upon installation

INSTALLED ON .....

DATE .....

MAINTENANCE RELEASE

INSTALLATION RECORD

DATE	AIRCRAFT
POSITION	
A/F TIME	CYCLES/LSN
REPLACED UNIT SERIAL No.	
SIGNATURE	
SNAG No.	

REMARKS

Details of work performed / reason for removal

CLEANED SERVICED & REPAIRED

Additional work to be performed upon installation

INSTALLED ON .....

DATE .....

MAINTENANCE RELEASE

Airfab

A.I.R. FABRICATION & WELDING
D.O.T. APPROVAL No. 45-90

MAINTENANCE RELEASE

Nomenclature ..... HEAT SHROUD
Manufacturer: ..... CESSNA ..... Type/Model 185
Part No.: ..... 0750161-87 ..... Serial No.: A1852415
Total Time: ..... N.A ..... Work Order: 1893
Overhaul ☐ Repair ☒ Modification ☐ Removal ☐
Previous Certification: ..... N.P.

The maintenance described has been performed in accordance with the applicable standards of airworthiness.

2/11/97 ..... DATE
..... AME OR AUTHORIZED INSPECTOR
..... LIC. NO & STAMP

Details of outstanding work and other information on reverse.

Maintenance Release

D.O.T. App. No. _____
Nomenclature L/H AILERON
Manufacture CESSNA Type/Model A185F
Part No. 0523800-17 Serial No. 18503341
Total Time 832.35 Time Remaining _____ T.S.O. _____
New ☐ Overhauled ☐ Repaired ☒ Removed Serviceable ☐
Previous Certification C-GYVZ

The maintenance described has been performed in accordance with the applicable standards of airworthiness. Details of outstanding work and other information on reverse.

3 June 98 ..... Date
..... AME or Authorized Inspector

Maintenance Release

D.O.T. App. No. _____
Nomenclature R/H AILERON
Manufacture CESSNA Type/Model A185F
Part No. 0523800-18 Serial No. 18503341
Total Time 832.35 Time Remaining _____ T.S.O. _____
New ☐ Overhauled ☐ Repaired ☒ Removed Serviceable ☐
Previous Certification C-GYVZ

The maintenance described has been performed in accordance with the applicable standards of airworthiness. Details of outstanding work and other information on reverse.

3 June 98 ..... Date
..... AME or Authorized Inspector

INSTALLATION INSTRUCTIONS/REMARKS

Paint & Balance prior to install
Torque Mount Bolts - Reg
Ref: Cessna M.M.

Installed on A/C _____ Date _____

Installed at A/F Hrs. _____ Cycles _____

Installed By _____

Maintenance Release

INSTALLATION INSTRUCTIONS/REMARKS

Paint & Balance prior to installation
Torque Mount Bolts - Reg Ref.
Cessna M.M

Installed on A/C _____ Date _____

Installed at A/F Hrs. _____ Cycles _____

Installed By _____

Maintenance Release

INSTALLATION RECORD

DATE	AIRCRAFT
POSITION	
A/F TIME	CYCLES/LSN
REPLACED UNIT SERIAL No.	
SIGNATURE	
SNAG No.	

REMARKS

Details of work performed / reason for removal

CLEANED & REPAIRED

Additional work to be performed upon installation

INSTALLED ON .....

DATE .....

MAINTENANCE RELEASE

AIR TIME AND

DATE	DAILY TOTAL HRS.	DAILY TOTAL MIN.	TOTAL AIR TIME SINCE MFG. HRS.	TOTAL AIR TIME SINCE MFG. MIN.	ENGINEERING RECORD NOTE: USE BOTH PAGES AND AS MANY LINES AS REQUIRED FOR COMPLETE
BROUGHT FORWARD					
	+78		1073	.4	
MAY 1 04	ANNUAL INSPECTION COMPLETED AS PER CARS 625 APP. B				
	- OIL CHANGED PHILLIPS 20/50 ADDED				
	- ELT RECERTIFIED				
	- STARTER DRIVE REMOVED FOR REPAIR + REINSTALLED				
MAY 31 /04		NEW	THROTTLE		CONTROL CABLE INSTALLED
MAY. 1 05	+553		1128	7	ANNUAL INSP. COMPLETED AS PER CARS 625. APP. B
					- OIL + filter changed
					- compressions good
					- run up satisfactory
MAY 28 06	+34.9		1163	6	ANNUAL INSP COMPLETED AS PER CARS 625 APP. B
					- OIL + filter changed PHILLIPS 20/50 m
					- RH BRAKE PADS REPLACED 66-10600
					- WHEEL BEARINGS REPLACED + GREASED
					- COMPASS CHECKED · ELT RECERTIFIED
					- FIRE EX + FIRST AID KIT. OK
					- TACH CHECKED
					- RUN UP SATISFACTORY
Aug 9/07	35	1	1198	7	C-GYVZ Aug 9,2007 S/N 18502834 Annual inspection carried out, in accordance with CAR's 625.83 Appendix B & C using manufactures inspection sheets Replaced missing rivet in left main gear leg Main wheel bearings cleaned , inspected ,replaced as necessary & repacked Left exhaust collector to muffler clamp replaced Fuel shut off at header tank overhauled (SIL ind) New fire extinguisher installed Hartzell prop removed & McCauley prop installed Main & nose wheel tires & tubes replaced Right nav light repaired Tail light repaired Replaced missing lock wire on left fuel drain Adjusted water rudder pulley at pull up lever to keep cable on pulley Replaced pull up lever pivot clevis bolt to get rid of slop Repositioned right exhaust clamp to prevent movement Replaced dip stick adel clamp Checked & adjusted charging system to manu specs Adjusted horizontal stabilizer to get correct travel Replaced alternator belt Replaced cracvked vacuum hoses

INSPECTION, REPAIRS & REPLACEMENT ENTRIES. DRAW A DIAGONAL LINE THROUGH ANY UNUSED LINES IN DATE AND TIME COLUMNS.	SIGNATURE	LICENCE NUMBER
THE MAINTENANCE DESCRIBED HAS BEEN PERFORMED IN ACCORDANCE WITH APPLICABLE STANDARDS OF AIRWORTHINESS.		378535
THE MAINTENANCE DESCRIBED HAS BEEN PERFORMED IN ACCORDANCE WITH APPLICABLE STANDARDS OF AIRWORTHINESS.		378535
THE MAINTENANCE DESCRIBED HAS BEEN PERFORMED IN ACCORDANCE WITH APPLICABLE STANDARDS OF AIRWORTHINESS.		378535 73-02

ground strap at alternator connected
Propeller, throttle & mixture control attach bolts retorgued
#5 cylinder heat shield replaced
Replaced cabin heat hose muffler to firewall
Induction crossover tube drain replaced
Inlet filter replaced
Boulder cover screws re torqued
Intake duct in cowl missing rivet replaced
Aux fuel pump drain installed
Cowl flap hinge pin missing lock wire installed
Holes in upper cowl filled with rivets
Broken screws in float hatch covers replaced
RH shoulder harness system installed STC SA2067NM
Lose advisory system installed STC SA39CH
Gear switch repositioned in instrument panel
Right float missing rivets replaced
Right gear brake pads replaced
Left horizontal stabilizer tip replaced
Left float fwd bulkhead repaired
Pitot static port right replaced
Right wing tip rib repaired
Right wing aux spar fwd of aileron replaced
Right & left dummy damper assy replaced as per EDO bulletin 15
Nose gear dummy damper clamps & hardware removed & new
dummy damper clamp sets, heavy duty springs bolts & nylon step washers
installed
R.H.S. Inc. shoulder harness installed
Compass calibration check carried out
Tac calibration check carried out
ELT reinstalled (Western Avionics)

Compass calibration check
For 0 30 60 90 120 150 180 210 240 270 300 330
Steer 030 59 89 120 151 180 210 240 272 301 331

Tac calibration check
Reading Idle 800 1000 1300 1500 1700 2000 2200 2400 2500
Actual 648 801 1020 1313 1515 1702 2014 2213 2427 2518

Date Aug 9/07
The maintenance described above has been performed in accordance with the applicable standards of airworthiness.
Signed [signature]
Lic. No. 13 AMO 155-90

ORBIT AIRCRAFT INSTRUMENTS LTD. D.O.T. Approval No. 40-89

P.O. Box 392, Stn. L, Winnipeg, Manitoba R3H 0Z6 Ph. (204) 783-4716

MAINTENANCE RELEASE

NOMENCLATURE D.G.

PART NO. 4000B-12 MODEL or TYPE

MAKE Edo-Aire

SERIAL No. 40984C

NEW OVERHAULED W/O # 24068 REPAIRED

The maintenance described has been performed in accordance with the appliance standards of airworthiness.

Date Jun 20/05 #1

Inspector's Signature

FOR CUSTOMER USE

TSN TSO

INSTALLED ON CF DATE

A/F TIME ON INSTALLATION

ENGINEER'S SIGNATURE

JACE AVIATION WINKLER AIRPORT WINKLERMB.

DESCRIPTION THROTTLE CABLE PRAIRE FITING INV.# 129737

MAKE CESSNA MODEL/TYPE

PART# 9863053-17 SERIAL#

NEW [✓] OVERHAULED [] REPAIRED [] OTHER []

PREVIOUS CERTIFICTION TT

THE MATERIAL, PART, OR COMPONENT IDENTIFIED HERON HAS BEEN INSPECTED AND IS CERTIFIED AIRWORTHY

DATE- MAY 31 04 SIGNATURE

MAKE ADDITIONAL NOTES ON REVERSE AS NEEDED

SERVICABLE

---

1. Approving National Aviation Authority / Country: Transport Canada /Canada	2. Authorized Release Certificate: TCCA 24-0078	3. Form Tracking Number
4. Approved Organization name & address: Universal Aero Engines Ltd, 421 Airport Road, St Andrews,MB, R1A 3R2		5. Work Order / Contract/ Invoice: JAE 1717

6. Item	7. Description	8. Part No	9. Eligibility**	10. Qty	11. Serial/ Batch No	12. Status/ Work
1	STARTER CLUTCH	6113259 A30	X	1	JAE1717-0104	___ Overhaul ✓ Repaired ___ Inspected ___ Modified

13. Remarks: See Reverse	14. *See Reverse	15. *See Reverse	16.*See Reverse	17.*See Reverse	18.*See Reverse

19. ✓ CAR 571.10 Maintenance Release
___ Other regulations specified in block 13

Certifies that, except where otherwise specified in block 13, the work identified in block 12 & described in block 13 was performed in accordance with CAR 571.10

20. Authorized Signature

21. Certificate/Approval # AMO 81-91

22. Name RICHARD McGUIRK

23. Date (dd/mm/yyyy) MAY 18 2004

13. Remarks:

DISMANTLE CLEAN & INSPECT

REPLACE CLUTCH SPRING & BEARING (530685) (CD3109)

REPLACE OIL SEAL & COVER GASKET & BASE GASKET

ALL WORK PERFORM ON VAC FILE W/O 1717

**Installer must crosscheck eligibility with approved data.
*Blocks 14, 15, 16, 17 & 18 pertain to Manufacturing & are Not Applicable (N/A) to AMO 81-91 and this product.

AIR TIME AND

DATE	DAILY TOTAL HRS.	DAILY TOTAL MIN.	TOTAL AIR TIME SINCE MFG. HRS.	TOTAL AIR TIME SINCE MFG. MIN.	ENGINEERING RECORD NOTE: USE BOTH PAGES AND AS MANY LINES AS REQUIRED FOR COMPLETE
BROUGHT FORWARD					
09-10-2007					Cessna A185F C-GYVZ SN: 18503341 Total Time: 1199.9 Tach Time: 374.6 Removed McCauley D3A32C90-N/82NC-2 Propeller SN: 786167. Installed McCauley D3A34C401/90DFA-4 Propeller SN: 071108 in accordance with P. Ponk Aviation STC SA00640SE. See 337 dated this day. Updated the Weight and Balance. David A. Withstandley A&P 47625538
Apr 30/08	6 5 4		1198 7 1264 1		C-GYVZ May 30,2008 Annual inspection carried out in accordance with CAR's

Rivers Edge Avionics Ltd.
AMO 185-04
A/C REG: C-GYVZ
S/N: 18503341
T.A.F.T.: 1331.7

July 23, 2008

The following work was carried out on Rivers Edge Avionics Work Order Number W276 detail of witch are on file at Rivers Edge Avionics Ltd..

Work Carried Out:

Removed;
- No. 1 and No. 2 NARCO Avionics VHF COMM P/N: COM 810, S/N 55394, S/N 55393.
- GARMIN GPS 150XL P/N: 011-00345-00, S/N 81701197.
- GARMIN GA56, GPS Antenna P/N 011-00134-00, S/N 59025544.
- NARCO Avionics AT 150 Transponder, S/N 45352, and Antenna P/N AV-22.
- NARCO UGR-2 Mounting Base.

Installed; IAW SA01933LA
- GARMIN GNS 430W P/N: 010-00412-01, S/N 23420213, GA 35 GPS/ WAAS Antenna P/N: 013-00235-00, S/N 40062, TAWS/ Terrain Data Card P/N: 010-10201-21, Jeppesen Americas Data Card P/N 010-10546-01, GI-106A CDI P/N: 013-00049-00, S/N F08-11166, NAV Antenna P/N CI-215, S/N 248656. IAW GARMIN Installation Manual No. 190-00356-02. Original VHF COM Antennas used, New Coax run.
- GARMIN SL40 VHF COMM P/N 013-00106-01, S/N 25808356. IAW GARMIN Installation Manual No. 560-0956-03. Original VHF COM Antennas used, New Coax run.
- GARMIN GTX327 Transponder P/N: 010-00188-03, S/N 83733906, Transponder Antenna P/N: CI-105, S/N 40039.
- GARMIN GCF 314, Cooling Fan P/N: 013-00067-00, S/N 13032. IAW Sandia Aerospace Installation Manual No. ACF3XX-IS.
- Co-Pilot Transmit switch installed. IAW GARMIN GMA 347 Installation Manual No. 190-00325-01.

Inspections Carried Out;
- ELT Removed and Re-installed for 12 Month Inspection. P/N E-01-01, S/N 026174. ELT was Inspected under Rivers Edge Avionics Work Order No. W283. Next Inspection Due: July 23, 2009, Battery Due July 2010.
- Transponder and Encoder Tested IAW CAR 571, Appendix F. Next Inspection Due July 23, 2010.
- Pitot and Static System inspected and tested IAW CAR 571, Appendix B (a).

Equipment List and Weight and Balance will be amended at a later date. No Technical Log available.

Electrical Load Analysis will be amended at a later date. No Technical Log available.

The maintenance described has been performed in accordance with the applicable standards of airworthiness.

using MANU INS
129 #4-188 #5-129 #6-1
KI/Landing Light SW
placed
NSTALLED
LLED BA-8103-1
t nuts + WASHERS
P/N 40256307.
STALLED P/N 111-140

CARRIED FORWARD

AIR TIME AND

DATE	DAILY TOTAL HRS.	DAILY TOTAL MIN.	TOTAL AIR TIME SINCE MFG. HRS.	TOTAL AIR TIME SINCE MFG. MIN.	ENGINEERING RECORD NOTE: USE BOTH PAGES AND AS MANY LINES AS REQUIRED FOR COMPLETE
BROUGHT FORWARD					

09-10-2007 Cessna A185F C-GYVZ SN: 18503341 Total Time: 1199.9
Tach Time: 374.6

Removed McCauley D3A32C90-N/82NC-2 Propeller SN: 786167.

Installed McCauley D3A34C401/90DFA-4 Propeller SN: 071108 in accordance with P. Ponk Aviation STC SA00640SE. See 337 dated this day.

Updated the Weight and Balance.

David A. Withstandley A&P 47625538

1198 7

Apr 30/08 65 4 1264 1

C-GYVZ May 30,2008
Annual inspection carried out in accordance with CAR's 625.86 appendix B & C using manufactures inspection sheets as a guide
Hydraulic power pack removed overhauled by SIL Ind. & reinstalled gear cycled functioned properly
Right & left main tires replaced
Wheel bearings repacked
Oil pressure line at case tightened
Alternator belt tightened
Vacuum filters replaced
Fuel injectors cleaned were very dirty
Left nose oleo hydraulic oil filler valve replaced
Nose oleo air valve replaced
Instrument post light (red) replaced
Door Stewards installed in accordance with STC SA01120SE
Knots 2U flap gap seals installed as per STC SA2382NW
Compass calibration check carried out
Tacometer calibration check carried out

8/08 50hr insp Carried out using Manu in
Leakage #1-12% #2-10% #3 12% #4-18% #5-12% #6-
Smoke in Cockpit - From Taxi/Landing Light SW
#2+4 intake Seals Replaced
6 new RHB37E Plugs installed
New inlet filter installed BA-8103-1
Missing Front ENG Mount nuts + washers
New Battery RG-35AXC S/N 40256307.
New Master solinoid installed PN 111-14
Voltage adj to 14.2

CARRIED FORWARD

ENGINEERING RECORD

INSPECTION, REPAIRS & REPLACEMENT ENTRIES. DRAW A DIAGONAL LINE THROUGH ANY UNUSED LINES IN DATE AND TIME COLUMNS.	SIGNATURE	LICENCE NUMBER

Western AVIONICS

#230-4520 Agar Drive
Richmond, B.C., Canada V7B 1A3
Phone: 604-303-1177 Fax: 604-303-1167

DATE August 14, 2007 W/O: V13971 Registration: C-GYVZ

Removed Audio Panel Narco P# CP-136, S# 62851, ADF Control Head ADF141, P# 141750, P# 53086, ADF Indicator P# ADF101, S# 13621 and related wiring.
Installed Audio Control Panel GMA347 P# 010-00275-01, S# 47005549. GMA347 installed IAW IMI P# 190-00325-01, Rev. B, Dated June 2006.
Removed Narco Transponder P# AT 150, S# 45352. Unit repaired IAW Western Avionics WO# V14526. Repaired Transponder reinstalled and
ground tested serviceable IAW AC43.13-1B, Chapter 12, Section 2, Paragraph 12-20.
Mode C correlation performed among Altimeter P# 5436b-1, S# 13748, Encoder P# SSD120-30, S# S37446 and
Transponder Narco AT 150, S# 45352 serviceable IAW AWM 571 Appendix F.
Replaced GPS 150XL coax cable. Coax installed and unit ground tested serviceable IAW garmin GPS 150XL Installation Manual
P# 190-00067-62, Rev E, Dated April 3,1998.
ELA and Weight and Balance amended as per Western Avionics Document # V13971-501, -502, and -503.
ELA has decrease by 0.75 amps.
Sheet metal work carried out by Alex Aircraft Maintenance.

The maintenance described above has been performed in accordance with applicable standards of airworthiness.

AMO# 9-76/ EASA#: 145.7161 SIGNATURE: _____ Licence/ACA #: _____

WESTERN AVIONICS 47 BC CAN

Compass calibration check
For 0 30 60 90 120 150 180 210 240 270 300 330
Steer 002 31 61 91 121 149 181 209 240 269 297 330

Tachometer Calibration check
Reading idle 800 1000 1500 1700 2000 2200 2500 2700
Actual 510 809 1022 1510 1705 2002 2205 2499 2704

Date Apr 30/08
The maintenance described above has been performed in accordance with the applicable standards of airworthiness.
Signed _____
Lic. No. 15 AMO 155-90

Diodes REMOVED

TRANSferred FROM Journey log

AIR TIME AND

DATE	DAILY TOTAL HRS.	DAILY TOTAL MIN.	TOTAL AIR TIME SINCE MFG. HRS.	TOTAL AIR TIME SINCE MFG. MIN.	ENGINEERING RECORD NOTE: USE BOTH PAGES AND AS MANY LINES AS REQUIRED FOR COMPLETE
BROUGHT FORWARD					
Nov 5/08	168	0	1424	1	Leakage #1-12% R #2-16% R #3-16% R+V #4-16% Replaced burned out LANDING LIGHT New MAIN GEAR oleo's INSTALL P/N 690-0[illegible] Oil changed W100 oil filter CH48108 Plugs SERVICED ENG. Checked over #2 & #5 rocker cover ROSEN VISORS INSTALLED AS PER STC SA[illegible]
MAY 1/09	16	8	1440	9	

Compass calibration check
For 0 30 60 90 120 150 180 210 240 270 300 330
Steer 001 30 60 90 120 151 181 211 240 271 301 331

Tac calibration check
Reading idle 800 1000 1500 1700 2000 2200 2500 2700
Actual 510 810 1018 1509 1705 2002 2206 2499 2701

A

Rivers Edge Avionics Ltd.
AMO 185-04
A/C REG: C-GYVZ
S/N: 18503341
T.A.F.T.: 1440.9

May 27, 2009

The following work was carried out under Rivers Edge Avionics Ltd. Work Order Number W555, detail of which is on file at Rivers Edge Avionics Ltd.

Work Carried Out:

- Removed Garmin GMA347 Audio Panel P/N: 011-00807-00, S/N: 47005549.
- Removed ACK Technologies E-01 ELT S/N: 26174, ELT remote switch P/N: E-01-05, and ELT antenna.
- Installed and tested Garmin GMA340 Audio Panel P/N: 010-00152-11, S/N: 96286350 IAW Garmin GMA340 Installation Manual No. 190-00149-01, Rev. L, June 2003.
- Installed and tested Garmin GPSMAP696 GPS P/N: 010-00667-40, S/N: 1H6003758, IAW Garmin Manual No. 190-00919-00, Rev. C, Nov. 2008.
- Installed KANNAD 406 AF ELT kit P/N: S1840501-02, S/N: 2621270-0014, Dayton Granger ELT Antenna P/N: ELT10-773-3, S/N 4743, KANNAD Remote Control Panel P/N: RCP200 IAW KANNAD Installation Manual No. DOC06006E, Rev. 04, FEB 01/2007.
- KANNAD ELT P/N: S1840501-02, S/N: 2621051-0119 was programmed for Tail Number protocol under REA's Work Order No. W559. 15 Hex ID: A78DF02191001A5.

Next Inspection Due: May 08, 2010
Battery Replacement before: April, 2015

Weight and Balance:
New Empty Weight: 2,651.05 Lbs. @ 40.10 inches AFT of datum.
New Useful Load: 948.95 Lbs.

W555

2 3464

0 992

R W/O 7465

W/O 3482

Dec 1/09			1546	2	Work Preformed as Per Kal Air W/O 3491
					CARRIED FORWARD

AIR TIME AND

DATE	DAILY TOTAL HRS.	DAILY TOTAL MIN.	TOTAL AIR TIME SINCE MFG. HRS.	TOTAL AIR TIME SINCE MFG. MIN.	ENGINEERING RECORD NOTE: USE BOTH PAGES AND AS MANY LINES AS REQUIRED FOR COMPLETE
BROUGHT FORWARD					
Nov 5/08	168	0	1424	1	Leakage #1-12½R #2-16½R #3-16½-RAV #4-16½ Replaced burned out LANDING LIGHT New MAIN GEAR oleo's INSTALL P/N 690-034 Oil changed W100 oil filter CH48108 Plugs SERVICED ENG. Checked over #2 & #5 rocker Cover ROSEN VISORS INSTALLED AS PER STC SA00
MAY 1/09	16	8	1440	9	Compass calibration check For 0 30 60 90 120 150 180 210 240 270 300 330 Steer 001 30 60 90 120 151 181 211 240 271 301 331 Tac calibration check Reading idle 800 1000 1500 1700 2000 2200 2500 2700 Actual 510 810 1018 1509 1705 2002 2206 2499 2701 A
~~January~~ May 27/09	1		1440	9	WORK AS PER River's edge W/O W555
Aug 6/09			1479	8	WORK AS PER KAL-AIR REPAIR W/O 3464
Aug 6/09			1479	8	Work Preformed AS Per Skytec WO 992
Aug 12/09			1487	9	Work Preformed as per Kal-Air WO 3465
Dec 9/09			1545	7	Work Preformed as Per KAL-AIR W/O 3482
Dec 14/09			1546	2	Work Preformed as Per Kal-Air W/O 3491
					CARRIED FORWARD

ENGINEERING RECORD

INSPECTION, REPAIRS & REPLACEMENT ENTRIES. DRAW A DIAGONAL LINE THROUGH ANY UNUSED LINES IN DATE AND TIME COLUMNS.	SIGNATURE	LICENCE NUMBER
#5 168R #6 - 189R		
Date Nov 5/08 AMO 155-90 The maintenance described above has been performed in accordance with the applicable standards of airworthiness. Signed Lic. # 13		
Cylinders retorqued		

May 1,2009 C-GYVZ T.T. 1440.9
Annual inspection carried out I.a.w. CAR's 625.86 appendix B & C using manufactures inspection sheets as a guide
Heat shield between #3 & 5 replaced
Missing bolt from exhaust left side replaced
New inlet filter installed
Vac filters Installed
Direct replacement alternator S/N 26-73705 installed as Per Plane-Power installation instructions STC SA01625a
Vortex generators installed on wings & tail horizontal Stab & vertical stab in accordance with Plane-Power Drawing package MA2209 rev IR as per STC # SA01646SE Option 1

N.S.

A/C SVS LTD.
992
A/C Registration: C-GYVZ

Log Date	Tach Time	TTAF	Eng1 TTSN/O	Prop1 TTSN/O	Eng2 TTSN/O	Prop2 TTSN/O
8/6/2009		1479.8				

1. Fab fit & install new LH and Rh rudder skins.
2. Fab fit & installed new rudder torque tube. Welding by Cub Parts.
3. Prime & paint rudder 3 colors.

WORK DESCRIBED ABOVE HAS BEEN PERFORMED IN ACCORDANCE WITH THE APPLICABLE AIRWORTHINESS REQUIREMENTS.

AMO 107-97 M263199

I HAVE CHECKED AN INDEPENDENT CHECK OF CONTROL SYSTEMS DESCRIBED ABOVE FOR CORRECT ASSEMBLY, LOCKING, RANGE OF TRAVEL, AND SENSE OF OPERATION

M367165

TFJL

ENGINEERING RECORD

INSPECTION, REPAIRS & REPLACEMENT ENTRIES. DRAW A DIAGONAL LINE THROUGH ANY UNUSED LINES IN DATE AND TIME COLUMNS.	SIGNATURE	LICENCE NUMBER
#5 168 R #6 - 189 R		
Date Nov 5/08 AMO 155-90 The maintenance described above has been performed in accordance with the applicable standards of airworthiness. Signed [signature] Lic. # 13		
Bolts retorqued		
May 1,2009 C-GYVZ T.T. 1440.9 Annual inspection carried out I.a.w. CAR's 625.86 appendix B & C using manufactures inspection sheets as a guide Heat shield between #3 & 5 replaced Missing bolt from exhaust left side replaced New inlet filter installed Vac filters Installed Direct replacement alternator S/N 26-73705 installed as Per Plane-Power installation instructions STC SA01682SE Vortex generators installed on wings & tail horizontal Stab & vertical stab in accordance with Plane-Power Drawing package MA2209 rev IR as per STC # SA01646SE Option 1		
N.S.		
T.F.J.L.	[signature]	
TFJL	[signature]	
TFJL	[signature]	
TFJL	[signature]	
T.F.J.L.	[signature]	
TFJL	[signature]	

STAPLES

AIR TIME AND

DATE	DAILY TOTAL HRS.	DAILY TOTAL MIN.	TOTAL AIR TIME SINCE MFG. HRS.	TOTAL AIR TIME SINCE MFG. MIN.	ENGINEERING RECORD NOTE: USE BOTH PAGES AND AS MANY LINES AS REQUIRED FOR COMPLETE
BROUGHT FORWARD			1546	2	
June 4/10			1560	8	

YVZ June 4,2010 T.T.1560.8
Annual inspection carried out in accordance with CAR's 625.86
Appendix B & C using manu insp sheets as a guide
Intake heat shields repaired as necessary & 3 replaced
Fuel strainer O rings replaced
Repaired fuel distributor valve repaired new diaphragm installed
Magneto base seals replaced
Oil cop safety chain replaced
Inlet filter replaced
Spinner relieved to get required clearance for prop
Replaced left calliper bleed screw
Vac filters replaced
Prop re & re for repair a-1 Prop invoice # 19037
Right stab rear attach bolt critiqued
All cylinder replaced new Lycon rebuilding trace LYC-34877-1 thru 6
Left tire & tube replaced tube trace Avial invoice # 4500272876
Tire cus supplied
Left & right callipers overhauled
Callipers remounted in correct position
Oleos adjusted gto correct hight
Exhaust reinstalled
#1cyl lifters replaced
Compass swung
Tac calibration carried

June 15/11	77	4	1638	2	

YVZ June 15,2011
100hr annual insp carried out IAW CAR's
Appendix B & C using manu insp sheets
Pilots seat attached properly
Intake clamps tightened
Loose rivets under left side of hor.stab.
Replaced
Fire extinguisher recertified
ELT receert Western Avionics track VA454
Compass swung
Tac check carried out
Unapproved mod - exhaust muffler no approved for aircraft
Customer said to leave it customer
Advised unapproved & will negate cof a

Air Worthiness Directives completed
Seat track insp for cracks,corrosion & wear IAW
87-15R2 no faults found
Exhaust & muffler insp carried out for cracks, holes
Heat corrosion, leakage IAW 90-3R3 no
Faults found except muffler 0750238-HP47AWL
Is not approved for installation on Cessna 185

CARRIED FORWARD

1. Approving Civil Aviation Authority / Country	AUTHORIZED RELEASE CERTIFICATE **FORM ONE**	3. Form Tracking No.
Transport Canada		**VA454**

4. Approved Organization	5. Work Order/Contract/Invoice
Western AVIONICS 230 - 4520 Agar Drive 604-303-1177 (Tel) Richmond, BC 604-303-1167 (Fax) CANADA V7B 1A3	**Cust PO: C.O.D**

6. Item	7. Description	8. Part No	9. Qty	10. Serial/Batch #.	11. Status/Work
1	**ELT**	**S1840501-01**	**1**	**2621051-0119**	**Inspected / Tested**

12. Remarks

Bench inspected and tested in accordance with the CARs, AWM571, appendix " G " as per KANNAD CMM/IPL 25-63-03, Rev 1, JUL 11/2008.
Confirmed the 15 digit hex ID: A78DF 02191 001A5, Aircraft hex #: C08644.
Battery due: 04/2015.
Next re-cert: 06/2012.

13a. Certifies the items identified above were manufactured in conformity to:	14a. Certifies that, except where otherwise specified in block 12, the work identified in block 11 and described in block 12 was performed in accordance with Canadian Aviation Regulations.
☐ Approved design data and are in condition for safe operation ☐ Non approved design data specified in block 12	☒ CAR 571.10 Maintenance Release ☐ Other regulation specified in block 12

13b. Signature	13c. Approved Organization Number	14b. Signature	14c. Approved Organization No	Insp #: 45
			AMO 9-76	WESTERN AVIONICS 45 TCCA 9-76
13d. Name (typed or printed)	**13e. Date**	**14d. Name (typed or printed)**	**14e. Date**	
		Yu Shen	**16/06/2011**	

Rev 2010.11.16

INSTALLER RESPONSIBILITIES

This document does not constitute authority to install. Installers working in accordance with the national regulations of a country other than the authority specified in Block 1, must ensure that their regulations recognized certifications from the country specified. Statements 13a and 14a do not constitute installation certification. In all cases, the aircraft technical record must contain an installation certification, issued in accordance with the applicable national regulations before the aricraft may be flown.

AAMR 4111

1. Approving national aviation authority/country	2. AUTHORIZED RELEASE CERTIFICATE FORM ONE	3. Form tracking No.
Transport Canada		YUZ

4. Approved organization and address	5. Work order/contract/invoice
ALEX AIRCRAFT MAINTENANCE & REPAIR INC. **11122 81A Avenue Delta BC V4C 2A1**	YUZ

6. Item	7. Description	8. Part No.	9. Qty.	10. Serial/batch No.	11. Status/work
	Fire Extinguisher	A02	1	YT-88603	

12. Remarks

Inspected as per Manufacturer Instructions

13a. Certifies that the items indentified above were manufactured in conformity to:	14a.
☐ Approved design data and are in condition for safe operation. ☐ Non approved design data specified in block 12.	☒ CAR 571.10 Maintenance release. ☐ Other regulations specified in block 12. Certified that, except where otherwise specified in block 12, the work indentified in block 11 and described in block 12 was performed in accordance with CAR 571.

13b. Authorized signature	13c. Certificate/Approval ref. No.	14b. Authorized signature	14c. Certificate/Approval ref. No.
	/ 155-90		13-3 /155-90
13d. Name	**13e. Date (dd/mmm/yyyy)**	**14d. Name**	**14e. Date (dd/mmm/yyyy)**
		HORSTMANN	15TH JUN/2011

*Installer must cross-check eligibility with approved data

1. *This certificate does not constitute authority to install.*

2. *Installers working in accordance with the national regulations of a country other than that specified in block 1 must ensure that their regulations recognize certifications from the country specified.*

3. *Statements in 13A or 14A do not constitute installation certification. In all cases, the technical record for the aircraft must contain an installation certification issued in accordance with the applicable national regulations before the aircraft may be flown.*

Installed on: YUZ *A/C Tat:* _____ *P/N Removed:* _____

Date: June 15/11 *S/N Removed:* _____

By: _____

INSPECTION, REPAIRS & REPLACEMENT ENTRIES. DRAW A DIAGONAL LINE THROUGH ANY UNUSED LINES IN DATE AND TIME COLUMNS.	SIGNATURE	LICENCE NUMBER
Bypass		
Idle 0 30 60 90 120 150 180 210 240 270 300 330		
Idle 0 31 61 90 120 149 179 210 240 270 300 350		
Take		
Reading Idle 800 900 1200 1500 1700 1900 ~~2100~~ 2100 2400 2700		
360 809 1008 1203 1511 1708 1913 2119 2408 2701		
Fuel Pump Replaced Cus. Sup.		

Date June 4/10
The maintenance described above has been performed in accordance with the applicable standards of airworthiness.
Signed
Lic. No. 13 AMO 155-90

Skytek A/C SVS LTD.
WO#: 1110
A/C Registration: C-GYVZ

Log Date	Tach Time	TTAF	Eng1 TTSN/O	Prop1 TTSN/O	Eng2 TTSN/O	Prop2 TTSN/O
9/10/2010	848.9	1602.5				

1. Removed incorrect oil cooler & installed new P# CAM552661 (PDA#01-11) with new gaskets. Installed new baffle seal at aft outboard end of oil cooler. and modified baffle aft of cooler.
2. Check floats for evedence of hydraulic fluid leaks.
3. Removed emergency gear extension pump, replaced four O-rings & reinstalled. Cycled gear no leaks found. Topped system up with fluid.

THE MAINTENANCE DESCRIBED ABOVE HAS BEEN PERFORMED IN ACCORDANCE WITH THE APPLICABLE AIRWORTHINESS REQUIREMENTS.

Keith Swartz AMO 107-97 M263199

I HAVE CONDUCTED AN INDEPENDENT CHECK OF CONTROL SYSTEMS DESCRIBED ABOVE FOR CORRECT ASSEMBLY, LOCKING, RANGE OF TRAVEL, AND SENSE OF OPERATION.

Darian Swartz M367165

Reading idle 1000 1200 1400 1500 1700 1900 2000 2200 2600 2700
Actual 680 1011 1208 1411 1510 1711 1891 2008 2209 2608 2704

Date June 15/11
The maintenance described above has

Skytek A/C SVS LTD.
WO#: 1113
A/C Registration: C-GYVZ

Log Date	Tach Time	TTAF	Eng1 TTSN/O	Prop1 TTSN/O	Eng2 TTSN/O	Prop2 TTSN/O
12/14/2010		1629.9				

1. Installed new Mixture control Pn 9862066-3
2. Installed new governor control Pn 9862067-8
3. Installed New exhaust collector Pn 0750238-HP47AWL. This is installed per owners directions. This Mod is NOT Approved
4. Tensioned alternator belt
5. Installed new owner supplied throttle control Pn MC299505-0501
6. Fab'd & installed repair to throttle & mixture control attachment brackets

THE MAINTENANCE DESCRIBED ABOVE HAS BEEN PERFORMED IN ACCORDANCE WITH THE APPLICABLE AIRWORTHINESS REQUIREMENTS EXCEPT AS NOTED.

Keith Swartz AMO 107-97 M263199

I HAVE CONDUCTED AN INDEPENDENT CHECK OF CONTROL SYSTEMS DESCRIBED ABOVE FOR CORRECT ASSEMBLY, LOCKING, RANGE OF TRAVEL, AND SENSE OF OPERATION.

Shane Parish M343924

INSPECTION, REPAIRS & REPLACEMENT ENTRIES. DRAW A DIAGONAL LINE THROUGH ANY UNUSED LINES IN DATE AND TIME COLUMNS.	SIGNATURE	LICENCE NUMBER
COMPASS		
To 030 60 90 120 150 180 210 240 270 300 330		
Steer 031 61 90 120 149 179 210 240 270 300 350		
Tach		
Reading Idle 800 1000 1200 1500 1700 1900 ~~2000~~ 2100 2400 2700		
560 809 1008 1203 1511 1708 1913 2119 2408 2701		
Fuel Pump Replaced Cus. Sup.		

Date June 4/10
The maintenance described above has been performed in accordance with the applicable standards of airworthiness.
Signed [signature]
Lic. No. 13 AMO 155-90

Compass swing
To 030 60 90 120 150 180 210 240 270 300 330
Steer 030 61 91 120 150 180 209 239 270 300 330

Tach calibration check
Reading idle 1000 1200 1400 1500 1700 1900 2000 2200 2600 2700
Actual 680 1011 1208 1411 1510 1711 1891 2008 2209 2608 2704

Date June 15/11
The maintenance described above has been performed in accordance with the applicable standards of airworthiness.
Signed [signature]
Lic. No. 13 AMO 155-90

AIR TIME AND

DATE	DAILY TOTAL		TOTAL AIR TIME SINCE MFG.		ENGINEERING RECORD
	HRS.	MIN.	HRS.	MIN.	NOTE: USE BOTH PAGES AND AS MANY LINES AS REQUIRED FOR COMPLETE
BROUGHT FORWARD					

Skytek A/C SVS LTD.
WO#: 1133
A/C Registration: C-GYVZ

Log Date	Tach Time	TTAF	Eng1 TTSN/O	Prop1 TTSN/O	Eng2 TTSN/O	Prop2 TTSN/O
12/17/2010						

1 Crack on lower cowl, lh side, outboard of cowl flap repaired with a external doubler. Primed and painted.
2 Dzus and receptical replaced for Lower cowel, Lh OB of cowl flap position
3 Metal cut away from duct on Lower cowel air intake to allow clearance for Exhaust and a aluminum patch formed and rivited in place to cover cutaway.all edges bead sealed.
4 Replaced small intake connector duct

THE MAINTENANCE DESCRIBED ABOVE HAS BEEN PERFORMED IN ACCORDANCE WITH THE APPLICABLE AIRWORTHINESS REQUIREMENTS.

Keith Swartz M263199

Skytek A/C SVS LTD.
WO#: 1143
A/C Registration: C-GYVZ

Log Date	Tach Time	TTAF	Eng1 TTSN/O	Prop1 TTSN/O	Eng2 TTSN/O	Prop2 TTSN/O
3/30/2011						

1 Install STC # SA00709CH Precise-Flow replacement air vents (kit supplied)
2 move a/c
3 Rebuild aft LH main gear oleo with new seals.
4 Replace RH cowl flap cable Modify brackets
5 Install supplied outside air temp. and breaker and relocate AUX In and AUX XM

THE MAINTENANCE DESCRIBED ABOVE HAS BEEN PERFORMED IN ACCORDANCE WITH THE APPLICABLE AIRWORTHINESS REQUIREMENTS.

Keith Swartz M263199

Skytek A/C SVS LTD.
WO#: 1172
A/C Registration: C-GYVZ

Log Date	Tach Time	TTAF	Eng1 TTSN/O	Prop1 TTSN/O	Eng2 TTSN/O	Prop2 TTSN/O
11/1/2011						

1 Check exhaust for leaks /pressure test no leaks found.
2 Checked engine over due to noise complaint.
3 Tightened 3 of 6 fuel injectors in cylinders. (one found not even finger tight)
4 Grease nose and main landing gear.
5 Check Rh main gear oleo for fluid and fill with nitrogen
6 Install new red gear light bulb
7 Install float drain hose

THE MAINTENANCE DESCRIBED ABOVE HAS BEEN PERFORMED IN ACCORDANCE WITH THE APPLICABLE AIRWORTHINESS REQUIREMENTS.

Keith Swartz M263199

Skytek A/C SVS LTD.
WO#: 1191
A/C Registration: C-GYVZ

Log Date	Tach Time	TTAF	Eng1 TTSN/O	Prop1 TTSN/O	Eng2 TTSN/O	Prop2 TTSN/O
2/13/2012						

1 Grease all landing gear nipples.
2 Add air to Rh main tire.
3 Fab fit & install 2 winter front covers for each side of cowling.
4 Install insulation on breather tube

THE MAINTENANCE DESCRIBED ABOVE HAS BEEN PERFORMED IN ACCORDANCE WITH THE APPLICABLE AIRWORTHINESS REQUIREMENTS.

Keith Swartz M263199

ENGINEERING RECORD

INSPECTION, REPAIRS & REPLACEMENT ENTRIES. DRAW A DIAGONAL LINE THROUGH ANY UNUSED LINES IN DATE AND TIME COLUMNS.	SIGNATURE	LICENCE NUMBER

AIR TIME AND

DATE	DAILY TOTAL HRS.	DAILY TOTAL MIN.	TOTAL AIR TIME SINCE MFG. HRS.	TOTAL AIR TIME SINCE MFG. MIN.	ENGINEERING RECORD NOTE: USE BOTH PAGES AND AS MANY LINES AS REQUIRED FOR COMPLETE
BROUGHT FORWARD					

Skytek A/C SVS LTD.
WO#: 1201
A/C Registration: C-GYVZ

Log Date	Tach Time	TTAF	Eng1 TTSN/O	Prop1 TTSN/O	Eng2 TTSN/O	Prop2 TTSN/O
2/13/2012	941.3					

1 Installed new MC9860074-3 Lh cowl flap control cable.
2 Rigged fuel shut off valve & installed new cable attachment clamp, bolt, & nut.
3 Push to talk switch cleaned. new part on order.
4 Charged battery.

THE MAINTENANCE DESCRIBED ABOVE HAS BEEN PERFORMED IN ACCORDANCE WITH THE APPLICABLE AIRWORTHINESS REQUIREMENTS.

AMO 107-97 M263199

Keith Swartz

I HAVE CONDUCTED AN INDEPENDENT CHECK OF CONTROL SYSTEMS DESCRIBED ABOVE FOR CORRECT ASSEMBLY, LOCKING, RANGE OF TRAVEL, AND SENSE OF OPERATION.

M367165

Darian Swartz

Outstanding Defects:

3 New push to talk switch on order
4 Engine turns over very poorly. possible causes Starter, contactor(s), poor wire conection(s).
5 No permanent seat stops installed.
6 Secondery seat stop not adjusted or defective.
7 2 of 3 clamps for cowl flap cable Lh side on firewall cracked/broken
8 Aft seat missing aft hold down retainers
9 Engine baffle seals folded and not sealing properly.
10 Several rudder cable guide holders have one of 4 prongs broken.
11 Looks like possible fuselege damage where aft float gear attached to fuselage and belly skins between. Could be just poor installation of float kit or fuselage repair.
12 Lh Inboard seat track does not meet limits of Airworthiness directive on same.

Skytek A/C SVS LTD.
WO#: 1208
A/C Registration: C-GYVZ

Log Date	Tach Time	TTAF	Eng1 TTSN/O	Prop1 TTSN/O	Eng2 TTSN/O	Prop2 TTSN/O
3/14/2012	943.2					

1 Installed new McFarlane Seat track Pilots inboard Pn MC0711693-9.
2 Adjusted secondary seat stop to operate as per installation instructions
3 Installed Mcfarlane seat stop kit #1 on pilot & copilot's seat.
4 Removed cleaned & reinstalled fuel return line one way valve.
5 Adjusted fuel shut off valve handle by fuel selector up one inch for easier access.

THE MAINTENANCE DESCRIBED ABOVE HAS BEEN PERFORMED IN ACCORDANCE WITH THE APPLICABLE AIRWORTHINESS REQUIREMENTS

AMO 107-97 M263199

Keith Swartz

I HAVE CONDUCTED AN INDEPENDENT CHECK OF CONTROL SYSTEMS DESCRIBED ABOVE FOR CORRECT ASSEMBLY, LOCKING, RANGE OF TRAVEL, AND SENSE OF OPERATION.

M367165

Darian Swartz

Advisory Items

6 Inspected Internal structure under floor between aft float strut attachment points No internal structure damage found. Poor workmanship from previous repairs found

CARRIED FORWARD

ENGINEERING RECORD

INSPECTION, REPAIRS & REPLACEMENT ENTRIES. DRAW A DIAGONAL LINE THROUGH ANY UNUSED LINES IN DATE AND TIME COLUMNS.	SIGNATURE	LICENCE NUMBER

AIR TIME AND

DATE	DAILY TOTAL		TOTAL AIR TIME SINCE MFG.		ENGINEERING RECORD
	HRS.	MIN.	HRS.	MIN.	NOTE: USE BOTH PAGES AND AS MANY LINES AS REQUIRED FOR COMPLETE
BROUGHT FORWARD					

Skytek A/C SVS LTD.
WO#: 1210
A/C Registration: C-GYVZ

Log Date	Tach Time	TTAF	Eng1 TTSN/O	Prop1 TTSN/O	Eng2 TTSN/O	Prop2 TTSN/O
3/23/2012	948.6					

1 Installed new push to talk switch P# S1985-1
2 Installed new fuel fretun line one way valve P# S2218-2.

THE MAINTENANCE DESCRIBED ABOVE HAS BEEN PERFORMED IN ACCORDANCE WITH THE APPLICABLE AIRWORTHINESS REQUIREMENTS.

Keith Swartz M263199

Skytek A/C SVS LTD.
WO#: 1221
A/C Registration: C-GYVZ

Log Date	Tach Time	TTAF	Eng1 TTSN/O	Prop1 TTSN/O	Eng2 TTSN/O	Prop2 TTSN/O
5/7/2012						

1 Connected landing light wires in cowling.
3 Pushed EGT probe #6 cylinder back into clamp.
4 Greased landing gear

THE MAINTENANCE DESCRIBED ABOVE HAS BEEN PERFORMED IN ACCORDANCE WITH THE APPLICABLE AIRWORTHINESS REQUIREMENTS.

Keith Swartz M263199

Skytek A/C SVS LTD.
WO#: 1229
A/C Registration: C-GYVZ

Log Date	Tach Time	TTAF	Eng1 TTSN/O	Prop1 TTSN/O	Eng2 TTSN/O	Prop2 TTSN/O
7/10/2012	992.9	1727.0				

1 Check tail beacon light found flasher not putting out power. Installed new clamp Pn 01-0450685-00.
2 Check & clean air vents. Switch Lh for Rh. Rh vent not working properly.
3 Check for proper part & order new EGT Probe.
4 Reglue Lh vent & ship Rh vent for warrantee reinstalled Lh vent after repair.
5 Tighten 5 of 6 engine fuel injectors in cylinders
6 Installed new sceet hose from muffler to cabin heat box
7 Installed one new snap ring on lower cowling 1/4 turn fastener
8 Retimed mags to 22 degrees before top dead center
9 Flow tested fuel injectors on engine found all even
10 Rotated spark plugs #2 to # 6 cylinder.
11 Installed newly overhauled mags S6RN-1225, Model # 10- 349350-4 & -5, Sn C051182 & Sn F015027.
12 Installed two new URHB32E spark plugs in #6 cylinder
13 Switched #2 & #6 fuel injectors.
14 Installed new Real Gasket on #6 rocker box cover. Screws torqued to 25 inch lbs
15 Fab fit & installed new intake hose heat deflector at # 5 cylinder.
16 Installed six (6) new GAMI fuel injectors Kit # GAD12E S/N 21912 as per STC# SE09217SC, PMA #PQ821SW PER GAMIjector Installation Procedure No IP-96-001 (rev004) dated Sept 25,1996. No change in weight and balance.
17 Removed & reinstalled #6 cylinder Sn J57644 after repair by Pro Aero Engines Inc.
18 Oil changed to Shell 100 mineral oil. 10 US quarts installed. Filter sectioned & found clean.
19 Installed new lifters pn SA628489 & SA646277 in engine for #6 cylinder due to pitting.

THE MAINTENANCE DESCRIBED ABOVE HAS BEEN PERFORMED IN ACCORDANCE WITH THE APPLICABLE AIRWORTHINESS REQUIREMENTS.

Keith Swartz M263199

CARRIED FORWARD

ENGINEERING RECORD

INSPECTION, REPAIRS & REPLACEMENT ENTRIES. DRAW A DIAGONAL LINE THROUGH ANY UNUSED LINES IN DATE AND TIME COLUMNS.	SIGNATURE	LICENCE NUMBER
Skytek A/C SVS LTD. WO#: 1248 A/C Registration: C-GYVZ 1 Replace Rh mag with newly overhauled unit Pn 10-349350-5 Sn H299708FR. THE MAINTENANCE DESCRIBED ABOVE HAS BEEN PERFORMED IN ACCORDANCE WITH THE APPLICABLE AIRWORTHINESS REQUIREMENTS. Keith Swartz	M263199	

Log Date	Tach Time	TTAF	Eng1 TTSN/O	Prop1 TTSN/O
7/30/2012	993.70			

AIR TIME AND

DATE	DAILY TOTAL		TOTAL AIR TIME SINCE MFG.		ENGINEERING RECORD
	HRS.	MIN.	HRS.	MIN.	NOTE: USE BOTH PAGES AND AS MANY LINES AS REQUIRED FOR COMPLETE
BROUGHT FORWARD					

Skytek A/C SVS LTD.
WO#: 1248
A/C Registration: C-GYVZ

Log Date	Tach Time	TTAF	Eng1 TTSN/O	Prop1 TTSN/O	Eng2 TTSN/O	Prop2 TTSN/O
8/16/2012	1012.9					

2 Compression check on repaired #6 cyl found @ 76/80
3 Oil changed to Sheil w100 10 liters installed. New Ch48108-1 filter installed. Small amount of metal found monitor.
4 Landing light bulb replaced with new Pn 4595 bulb.
5 Throttle mixture control rod arm adjusted leaner to prevent overcenter.
6 Landing gear greased.
7 Checked fuel system fuel flow both 3min 15 sec, Rt 3 min 32 sec. Lh 3 min 27 sec to fill a given pail of about 4 gallons. Lh tank slightly fuller.

THE MAINTENANCE DESCRIBED ABOVE HAS BEEN PERFORMED IN ACCORDANCE WITH THE APPLICABLE AIRWORTHINESS REQUIREMENTS.

Keith Swartz M263199

Skytek A/C SVS LTD.
WO#: 1264
A/C Registration: C-GYVZ

Log Date	Tach Time	TTAF	Eng1 TTSN/O	Prop1 TTSN/O	Eng2 TTSN/O	Prop2 TTSN/O
3/12/2013						

1 Check vacuum system not reading on guage. Wiggle vacuum relief valve regulator to unstick it.
2 Installed nut & washers on vacuum pump adaptor mount.
3 Replaced Lh brake pads, Lh slave cylinder O-rings, and blead Lh brake.
4 Install new BC fire extinguisher same position as original.
5 Installed new brake discs Lh & Rh sides.
6 Installed new bearings on Lh main wheel
7 Greased landing gear.
8 Filled main gear oleos with nitrogen as required.

THE MAINTENANCE DESCRIBED ABOVE HAS BEEN PERFORMED IN ACCORDANCE WITH THE APPLICABLE AIRWORTHINESS REQUIREMENTS.

Keith Swartz AMO 107-97 M263199

CARRIED FORWARD

ENGINEERING RECORD

INSPECTION, REPAIRS & REPLACEMENT ENTRIES. DRAW A DIAGONAL LINE THROUGH ANY UNUSED LINES IN DATE AND TIME COLUMNS.	SIGNATURE	LICENCE NUMBER

AIR TIME AND

DATE	DAILY TOTAL		TOTAL AIR TIME SINCE MFG.		ENGINEERING RECORD
	HRS.	MIN.	HRS.	MIN.	NOTE: USE BOTH PAGES AND AS MANY LINES AS REQUIRED FOR COMPLETE
BROUGHT FORWARD					

Skytek A/C SVS LTD.
WO#: 1298
A/C Registration: C-GYVZ

Log Date	Tach Time	TTAF	Eng1 TTSN/O	Prop1 TTSN/O	Eng2 TTSN/O	Prop2 TTSN/O
5/12/2013	1045.1					

.1 ELT Recertified by Inland Communications & reinstalled.
.3 Tachometer calibration checked & found reading LOW by 90RPM at 2600RPM indicated.
.6 Altimeter encoder calibrated and pitot static system checked by Inland Communications. remove package & ship components.
.7 First Aid kit inspected no faults found.
1 200 Hr & Annual inspection completed In accordance with CAR 625 Appendix "B & C" as applicable, using the A/C MFG's inspection sheets as a guide.
2 Differential cylinder leakage test #1-70R, #2-74, #3-72 R&E, #4-76, #5-76, #6-76 all over 80 taken warm.
3 Ten liters of W100 oil installed. Filter sectioned and found clean. New Ch48108-1 filter installed.
4 AD Cf 90-03R2 Exhaust type cabin heater inspected no defects found.
5 Installed new vacuum guage and vacuum lines to guage.
7 Installed new P# D6594 Spinner Assy. Prop reinstalled with new O-ring. Track checked & torqued.
8 Installed new Induction air filter.
9 Replaced rivets in Rh cowl flap hinge half flap side.
10 Adjusted engine mixture control to go stop to stop.
11 Installed 2 tie wraps on main power wire on forward side of firewall.
12 Installed tie wraps & siliconed EGT & Cht wires by # 1 cylinder to prevent wear.
13 Tied up and siliconed cooling hose to Fuel control unit.
14 Installed new MCM83248/1-010 O-Ring in top of fuel sediment bowl. Installed two new screw in Rh side of fuel sediment bowl & mounting bracket.
15 Installed spiral wrap & siliconed wires to fuel pump to prevent wear.
17 Adjusted governor control for full movement.
18 Fab, fit & installed small baffle immediatly aft of oil cooler Inboard end, siliconed holes in baffles as owner says engine runs hot in summer.
21 Installed new P# S1517-7 fuel strainer control.
22 Fab fit & installed new hinge on aft side of Rh door window. Counter sunk 1 side to prevent rivet head interferance.
23 Installed new Rh door outside handle Pn 0517003-2. Rh Latch mechanism cleaned & lubricated.
25 Removed washer from Rh control colum fwd side of universal to put bolt in safety.
26 Fab fit & installed 1/8 inch thick aluminum spacer under vacuum relief valve in order to be able to replace filter without loosening valve off each time.
27 Reconnected clamp on tail wheel lock control cable to hold cable out of way of elevator control belcrank.
28 Installed 3 new rivets in Lh side aft baggage compartment U channel for holding baggage floor in place.
29 Installed new boot on aux power plug.
30 Cleaned tailcone skins and belly skins under floor boards.
34 Installed 1 new 68W654-1 fitting On Rh float for water rudder cable.
34.1 Installed new Pn 68W654-1 fitting on fuselage for water rudder cable support..
35 Installed 2 new water rudder bumpers PN 0 type 14-141. Prc'd in place to protect them.
36 PRC'd water rudder retract cable guide in water rudder post to prevent movement of guide.
37 Reinstalled grommet by Rh tip tank for vent line in wing.
38 Installed 8 new S1450-3-3S10-032 stainless washers per Cessn SEB95-3. Installed new bolts of correct type & length for same.
39 Found 4 cracks stop drilled in Rh flap trailing edge. Max six allowed.
40 Installed 5 anchor nuts & 4 tinnerman nuts in Lh & Rh wing s for inspection panels. Screws replaced with correct sizes.
41 Installed #4 rivet in Rh aft wing spar most lower & inboard hole.
42 Installed new stainless100 degree countersunk screws in wing panels.
43 Wing flap gap seals ground and silicone bumper installed to prevent wear into flap tracks.
44 Topped hydraulic gear pump with fluid.
45 Topped brake master cylinders with fluid.
46 Installed new S1239-46 cabin air vent control cable.
47 Installed 1 new float pump out ball.
48 Repaced all 5 water rudder cables with new stainless cables.
49 Installed new fuel selector valve placard & new fuel tank placards.
50 Installed new ms20392-1C-49 clevis pin in upper baggage door hinge.
53 Removed cleaned & lubricated white plastic pullies for ailerons in cabin roof area.
54 Retensioned flap cables to 30 lbs.
55 Fab, fit & installed new fuel line from wing tank stub to half way down Lh rear door post. Clamped lines to door post with Adel clamps.
56 Installed one adel clamp to fuel lines on bottom end of forward door posts.
57 Tie wrapped wires in forward Rh door post in window area.
58 Fabricated silicone bushing for fuel vent line at instrument panel to prevent wear.
59 Installed new fuel selector valve handle cover P# 0716114-4B40 after painting grey to match interior.
60 Trimmed baggage door to fit opening.
61 Installed 6 new B rivets & washers In Rh cowl light.
62 Fab fit & installed new sides for Rh cowl flap.
63 Fit & installed hinge half on oil door.
64 Trimmed flap gap seals to prevent further rubbing on flap attach brackets.
65 Replaced Lh rudder peddals with those from Rh side. Reinstalled Lh peddals on Rh side. All assembled with correct fasteners.
66 Installed new cabin vent air hose. Repositioned avionics cooling fan from aft of glove box to top of glove box.
67 Installed new MC0510505-125 &-124 stainless elevator cables.
68 Installed MS21919WDG4 adel clamp on bulkhead forward of battery to support wires going to solinoids.
69 Installed two new rivets in forward baggage compartment center aft steel hold down bracket.
70 Installed Ms21919WDG15 clamp & angle bracket to support wires to landing gear box in front of gear motor/pump.
71 Re riveted rivnut for Rh door handle stop screw.
72 Installed rivets in flaps along ta fill existing holes across lh along skin joint.

Skytek A/C SVS LTD.
WO#: 1298
A/C Registration: C-GYVZ

Log Date	Tach Time	TTAF	Eng1 TTSN/O	Prop1 TTSN/O	Eng2 TTSN/O	Prop2 TTSN/O
5/12/2013	1045.1					

.1 ELT Recertified by Inland Communications & reinstalled.
.3 Tachometer calibration checked & found reading LOW by 90RPM at 2600RPM indicated.
.6 Altimeter encoder calibrated and pitot static system checked by Inland Communications. remove package & ship components.
.7 First Aid kit inspected no faults found.
1 200 Hr & Annual inspection completed In accordance with CAR 625 Appendix "B & C" as applicable, using the A/C MFG's inspection sheets as a guide.
2 Differential cylinder leakage test #1-70R, #2-74, #3-72 R&E, #4-76, #5-76, #6-76 all over 80 taken warm.
3 Ten liters of W100 oil installed. Filter sectioned and found clean. New Ch48108-1 filter installed.
4 AD Cf 90-03R2 Exhaust type cabin heater inspected no defects found.
5 Installed new vacuum guage and vacuum lines to guage.
7 Installed new P# D6594 Spinner Assy. Prop reinstalled with new O-ring. Track checked & torqued.
8 Installed new Induction air filter.
9 Replaced rivets in Rh cowl flap hinge half flap side.
10 Adjusted engine mixture control to go stop to stop.
11 Installed 2 tie wraps on main power wire on forward side of firewall.
12 Installed tie wraps & siliconed EGT & Cht wires by # 1 cylinder to prevent wear.
13 Tied up and siliconed cooling hose to Fuel control unit.
14 Installed new MCM83248/1-010 O-Ring in top of fuel sediment bowl. Installed two new screw in Rh side of fuel sediment bowl & mounting bracket.
15 Installed spiral wrap & siliconed wires to fuel pump to prevent wear.
17 Adjusted governor control for full movement.
18 Fab, fit & installed small baffle immediatly aft of oil cooler Inboard end, siliconed holes in baffles as owner says engine runs hot in summer.
21 Installed new P# S1517-7 fuel strainer control.
22 Fab fit & installed new hinge on aft side of Rh door window. Counter sunk 1 side to prevent rivet head interferance.
23 Installed new Rh door outside handle Pn 0517003-2. Rh Latch mechanism cleaned & lubricated.
25 Removed washer from Rh control colum fwd side of universal to put bolt in safety.
26 Fab fit & installed 1/8 inch thick aluminum spacer under vacuum relief valve in order to be able to replace filter without loosening valve off each time.
27 Reconnected clamp on tail wheel lock control cable to hold cable out of way of elevator control belcrank.
28 Installed 3 new rivets in Lh side aft baggage compartment U channel for holding baggage floor in place.
29 Installed new boot on aux power plug.
30 Cleaned tailcone skins and belly skins under floor boards.
34 Installed 1 new 68W654-1 fitting On Rh float for water rudder cable.
34.1 Installed new Pn 68W654-1 fitting on fuselage for water rudder cable support..
35 Installed 2 new water rudder bumpers PN 0 type 14-141. Prc'd in place to protect them.
36 PRC'd water rudder retract cable guide in water rudder post to prevent movement of guide.
37 Reinstalled grommet by Rh tip tank for vent line in wing.
38 Installed 8 new S1450-3-3S10-032 stainless washers per Cessn SEB95-3. Installed new bolts of correct type & length for same.
39 Found 4 cracks stop drilled in Rh flap trailing edge. Max six allowed.
40 Installed 5 anchor nuts & 4 tinnerman nuts in Lh & Rh wing s for inspection panels. Screws replaced with correct sizes.
41 Installed #4 rivet in Rh aft wing spar most lower & inboard hole.
42 Installed new stainless100 degree countersunk screws in wing panels.
43 Wing flap gap seals ground and silicone bumper installed to prevent wear into flap tracks.
44 Topped hydraulic gear pump with fluid.
45 Topped brake master cylinders with fluid.
46 Installed new S1239-46 cabin air vent control cable.
47 Installed 1 new float pump out ball.
48 Repaced all 5 water rudder cables with new stainless cables.
49 Installed new fuel selector valve placard & new fuel tank placards.
50 Installed new ms20392-1C-49 clevis pin in upper baggage door hinge.
53 Removed cleaned & lubricated white plastic pullies for ailerons in cabin roof area.
54 Retensioned flap cables to 30 lbs.
55 Fab, fit & installed new fuel line from wing tank stub to half way down Lh rear door post. Clamped lines to door post with Adel clamps.
56 Installed one adel clamp to fuel lines on bottom end of forward door posts.
57 Tie wrapped wires in forward Rh door post in window area.
58 Fabricated silicone bushing for fuel vent line at instrument panel to prevent wear.
59 Installed new fuel selector valve handle cover P# 0716114-4B40 after painting grey to match interior.
60 Trimmed baggage door to fit opening.
61 Installed 6 new B rivets & washers In Rh cowl light.
62 Fab fit & installed new sides for Rh cowl flap.
63 Fit & installed hinge half on oil door.
64 Trimmed flap gap seals to prevent further rubbing on flap attach brackets.
65 Replaced Lh rudder peddals with those from Rh side. Reinstalled Lh peddals on Rh side. All assembled with correct fasteners.
66 Installed new cabin vent air hose. Repositioned avionics cooling fan from aft of glove box to top of glove box.
67 Installed new MC0510505-125 &-124 stainless elevator cables.
68 Installed MS21919WDG4 adel clamp on bulkhead forward of battery to support wires going to solinoids.
69 Installed two new rivets in forward baggage compartment center aft steel hold down bracket.
70 Installed Ms21919WDG15 clamp & angle bracket to support wires to landing gear box in front of gear motor/pump.
71 Re riveted rivnut for Rh door handle stop screw.
72 Installed rivets in floor skins to fill existing holes especisily along skin joint.
73 Drilled holes in skin joint above so screws could be installed in anchor nuts already in place. Installed screws as required.
74 Installed P# 0705004-1 placard on flap handle.
75 Installed 11 new J6984-64 instrument panel rubber mounts. Fab, fit & installed 4 new ground straps.
76 Removed washer on forward flap pulley bolt to put nut in safety.
77 Removed clamp on fuel shut off cable & repositioned to not interfere with elevator control forward belcrank.
78 MCCaulley D3A34C401 prop with 90-DFA-4 blades found installed under STC # SA00640SE 9/10/2007 with no journey log entry. 337 & weight & Balance amendment found to verify above.
79 Rotated rear seat mike & phone jacks as required to prevent wires from rubbing on pullies and tightened jacks in position.
82 Removed twisted off screw in Lh float.

INSPECTION, REPAIRS & REPLACEMENT ENTRIES. DRAW A DIAGONAL LINE THROUGH ANY UNUSED LINES IN DATE AND TIME COLUMNS.	SIGNATURE	LICENCE NUMBER

A/C SVS LTD.

1298

A/C Registration: C-GYVZ

Log Date	Tach Time	TTAF	Eng1 TTSN/O	Prop1 TTSN/O	Eng2 TTSN/O	Prop2 TTSN/O
5/12/2013	1045.1					

Installed stainless nut & cotter pin on Rh Main landing gear support arm.

Replaced rusty nuts & incorrect length bolts in float rear spreader bar attach castings. Installed Black Bear Par-Al-Ketone applied on nut side to prevent corrosion.

Replaced rusty nuts & incorrect length bolts in float Fwd. spreader bar attach castings. Installed Black Bear Par-Al-Ketone applied on nut side to prevent corrosion.

See # 84

Pulley bracket eye bolts on floats cleaned nuts replaced inside floats. Black Bear Par-Al-Ketone on nut side applied to prevent corrosion.

Tied up wires to float micro switches with tie wraps. Reinstalled grommet in Lh float Fwd side.

LH scissors shimmed with .010 brass shim stock. bushings glued in with Locktight.

Lh Fwd. nose wheel torque link shimmed with thin 3/8 washers.

Installed new stainless cotter pin on landing gear cable in storage compartment.

Fab, fit & installed doubler, antenna & run cable as required for Aspen EFD100 EFIS System. Installation done in accordance to EFD1000& EFD500 Installation Manual Revision AJ dated Aug 2012. AC43.13-1B Change 2 Fig 4-6 (a) & 4-9 as applicable.

Fit & installed adaptor plate for Aspen head in instrument panel.

Ad 2011-10-09 Seat Latching.. Inspected Replaced seat rollers & guides in Lh seat. Replaced 1 pin for seat back.

Pilots seat secondary seat stop adjusted to release at .1" above seat track.

Installed anchor nut in steel strap to fix stripped steel nut strip.

Installed new Cleveland 40-87C wheel assembly on Rh float nose gear. Installed existing tire & tube. Filled wheel with grease & installed new 473237 (national) seals.

Set up engine fuel system pressures as per SID97-3E.

Adjusted engine idle stop to idle at 600 RPM.

Installed new Rapco Vaccum regulator assy Pn RA2H3-12.

MAINTENANCE DESCRIBED ABOVE HAS BEEN PERFORMED IN ACCORDANCE WITH THE APPLICABLE AIRWORTHINESS REQUIREMENTS.

Keith Swartz AMO 107-97 M263199

CONDUCTED AN INDEPENDENT CHECK OF CONTROL SYSTEMS DESCRIBED ABOVE FOR CORRECT ASSEMBLY, LOCKING, RANGE OF TRAVEL, AND SENSE OF OPERATION.

M367165

Darian Swartz

Outstanding Defects:

Compass calibration due.

Advisory Items

High voltage light in panel not connected.

Hoses in engine compartment dated 1995. Brake hoses have tags removed Due ea 10 years Cessna requirement.

Push rod tubes on # 1 cylinder appear to be leaking oil.

Fwd engine mount rubbers cracked. Recomend replacement on next annual.

Seat belts dated 2007 due for replacement in 2017 cessna requirement.

Missing floor for aft baggage compartment.

Center Lh stabilizer has cracked center leading edge rib.

Rh elevator & stabilizer hinge pionts do not line op straight.

Floor skin cracked in Lh gear box at inspection hole found previously stop drilled.

Stringer splice in Rh stringer baggage floor area not done to typical standards.

"V" brace in cabin for float kit found bent lh & rh sides.

Slight ripples in lower Rh wing outboard skin. Can find no defects internally.

Nose gear scissors bolts show wear. Recomend replacement on next annual.

Lower nose oleo mounting bolts found worn. Recomend replacement on next annual.

Cable seal on Lh float broken & should be replaced.

Rh float has several cables showing rust. Recomend replacement on next annual.

Nose & main wheel bearings on order

Ripcut in Rh rear seat belt.

Life jaskets due for annual inspection as per label on life jacket.

Pulley damaged on float by too long a screw in inspection panel.

Have not recieved tech logs in order to check any time lifed items like engine, prop, vacuum pump & coupler, switches etc. etc..

AIR TIME AND

DATE	DAILY TOTAL HRS.	DAILY TOTAL MIN.	TOTAL AIR TIME SINCE MFG. HRS.	TOTAL AIR TIME SINCE MFG. MIN.	ENGINEERING RECORD NOTE: USE BOTH PAGES AND AS MANY LINES AS REQUIRED FOR COMPLETE
BROUGHT FORWARD					

Skytek A/C SVS LTD.
WO#: 1307
A/C Registration: C-GYVZ

Log Date	Tach Time	TTAF	Eng1 TTSN/O	Prop1 TTSN/O	Eng2 TTSN/O	Prop2 TTSN/O
7/12/2013						

1 Installed new seals & bearings in removed defective nose wheel for use as an emergency spare.
2 Bleed Lh brake & reinstall fitting in caliper brake
3 Temp. fix trim wheel till parts come in.
4 Install new bulb in Lh landing gear up light. Spare bulb in glove box.
5 Install new roll pins and catches for elevator trim wheel.
6 Check aircraft for fuel leaks due to high fuel consumption.
7 Installed aft baggage compartment floor panel. installed 3 new stud pins & retainers in panel. Repositioned rear strobe light power pack to allow installation of floor.

THE MAINTENANCE DESCRIBED ABOVE HAS BEEN PERFORMED IN ACCORDANCE WITH THE APPLICABLE AIRWORTHINESS REQUIREMENTS.

Keith Swartz M263199

Skytek A/C SVS LTD.
WO#: 1340
A/C Registration: C-GYVZ

Log Date	Tach Time	TTAF	Eng1 TTSN/O	Prop1 TTSN/O	Eng2 TTSN/O	Prop2 TTSN/O
8/2/2013						

1 Top master Lh master cylinder brake with fluid & installed new seals in Lh master cylinder.
2 Tied float pumpout tube in postion with tie wrap.
3 Checkd Lh brake found up. Topped with fluid down slightly.
4 Greased landing gear.
5 Removed & installed new anchor nut in Lh fwd float pannel aft end.

THE MAINTENANCE DESCRIBED ABOVE HAS BEEN PERFORMED IN ACCORDANCE WITH THE APPLICABLE AIRWORTHINESS REQUIREMENTS.

Keith Swartz M263199

Skytek A/C SVS LTD.
WO#: 1344
A/C Registration: C-GYVZ

Log Date	Tach Time	TTAF	Eng1 TTSN/O	Prop1 TTSN/O	Eng2 TTSN/O	Prop2 TTSN/O
9/24/2013						

1 Replace AN816-4D fitting on Lh brake. Bleed Lh brake.
2 Replace AN816-4D fitting on Rh brake. Bleed Rh brake.

THE MAINTENANCE DESCRIBED ABOVE HAS BEEN PERFORMED IN ACCORDANCE WITH THE APPLICABLE AIRWORTHINESS REQUIREMENTS.

Keith Swartz M263199

CARRIED FORWARD

INSPECTION, REPAIRS & REPLACEMENT ENTRIES. DRAW A DIAGONAL LINE THROUGH ANY UNUSED LINES IN DATE AND TIME COLUMNS.	SIGNATURE	LICENCE NUMBER

Log Book Entry

McFarlane

Aviation Products

Date: 10-8-13 Part Number: 9851067-5

Time in Service UNKNOWN

This fuel Selector valve was cleaned, inspected, repaired, and pressure leak tested. Replaced seals, and other components as listed on Job Order # 35038 Fluorocarbon O-rings per McFarlane FAA-PMA, Cessna parts and industry standard hardware were used. This valve was found acceptable for return to service.

Lars Allen Certificate # A&P 3453414

AIR TIME AND

DATE	DAILY TOTAL		TOTAL AIR TIME SINCE MFG.		ENGINEERING RECORD NOTE: USE BOTH PAGES AND AS MANY LINES AS REQUIRED FOR COMPLETE
	HRS.	MIN.	HRS.	MIN.	
BROUGHT FORWARD					

Skytek A/C SVS LTD.
WO#: 1398 1 OF 2
A/C Registration: C-GYVZ

Log Date	Tach Time	TTAF	Eng1 TTSN/O	Prop1 TTSN/O	Eng2 TTSN/O	Prop2 TTSN/O
4/23/2014	1089.1	1798.75	966.4	618.85		

.1 ELT Recertified by Coldstream Helicopters
.2 Fire Extinguisher Recertified by OK Test Rite.
.3 Tachometer calibration checked & found reading LOW by 84RPM at 2300 RPM indicated.
.8 Life Jackets past due for annual service by manufacturer.
1 200 Hr & Annual inspection completed In accordance with CAR 625 Appendix "B & C" as applicable, using the A/C MFG's inspection sheets as a guide.
2 Differential cylinder leakage test #1-71, #2-72, #3-72, #4-74, #5-79, #6-73 all over 80 taken warm.
3 Ten liters of Shell W100 oil installed. Filter sectioned and found clean. New filter installed.
4 AD2011-10-09 Seat Slipping on rails See # 47,52 & 53
5 Installed 5 new rivets on Rh side cowling by cowl flap.
6 Installed 075203-27AGW cowling doubler. Fab fit and installed replacement doubler for -26.
7 Installed new 0750132-1 fwd and J15198-1 rear engine mount rubbers
8 Tightened clamps on dipstick tube.
11 Tightened exhaust clamp bolts.
12 Fab fit & installed new heat shield for Rh side engine mount lower tube as per old one.
13 Adjusted alternator belt tension.
14 Installed new boot on alternator power wire at alternator.
15 Installed new Anut for fwd screw on Rh fwd float inspection panel.
16 Straightened latch and ground rivet buck to allow Rh float hatch latch to close properly.
18 Replaced corroded line clamps screws, nuts & bolts in LH & Rh floats.
19 Prop blades rotate in hub .5 degrees. still in limits as .5 is limit.
20 Installed new BA8103-1 engine intake air filter.
21 Installed new engine side baffle seals.
23 Installed new tail and Lh wing nav light bulbs. Cleaned corrosion from tail nav light wires.
24 Installed new Wheelen power supply in Lh wing. cleaned ground connections and power connections
25 Lubed O-rings on primer
26 Adjusted forward and aft cross wires. Rotated upper eye bolts to face correct direction.
27 Replaced 4 ends on forward cross wires to replace wires with no holes for checking safety.
30 Retensioned aileron cables to 33lbs.
31 Adjusted bounce on prop control by adusting slide on arm
32 Adjusted stabilizer trim to 20lbs.
33 Adjusted rudder cable tension to 30lbs.
34 Installed new AARB3-5-1 vacuum relief valve filter.
35 Topped Rh master brake with fluid.
36 Installed fiber lock nut on Lh rudder torque tube bearing.
38 Installed Repaired fuel selector valve from McFarlane Pn 9851067-5S.
39 Installed new fuel injector line clamp Pn 652436-1 on #5 position.
40 Installed new roll pin in trim control wheel.
41 Rh boot cowling massaged to try and get dents out by step.
42 Steps on side of fuselage removed painted and reinstalled.
43 Rh exhaust collector dented per owners instructions to give clearance with engine mount and heat shield.
44 Plastic tail cone repaired in two places
45 Installed used like new supplied tire on Rh main wheel. Installed new supplied bearings & cones.
46 Installed new bearings & cones on Lh nose wheel & Lh main outboard
47 Installed new roller & guides on Rh fwd copilots seat leg
49 Installed New Monarch fuel caps and adaptor plates per STC # SA238CE SA 238/CE
50 Installed new McFarlane fuel vent lines Lh & Rh Tanks
51 Check Rh fuel tank interior. fuel vents, fuel line drains No faults found
52 Installed 4 new roll pins with welding rod centers to prevent shearing of pins again as height adjustment overcenters due to bent seat.
53 Pilots secondary seat stop adjusted to work properly
54 AD CF-90-03R2 Exhaust type cabin heaters inspected no faults found
55 Updated POH to include float operation instructions.

THE MAINTENANCE DESCRIBED ABOVE HAS BEEN PERFORMED IN ACCORDANCE WITH THE APPLICABLE AIRWORTHINESS REQUIREMENTS

Keith Swartz M263199

I HAVE CONDUCTED AN INDEPENDENT CHECK OF CONTROL SYSTEMS DESCRIBED ABOVE FOR CORRECT ASSEMBLY, LOCKING, RANGE OF TRAVEL AND SENSE OF OPERATION

Darian Swartz M367165

CARRIED FORWARD

ENGINEERING RECORD

INSPECTION, REPAIRS & REPLACEMENT ENTRIES. DRAW A DIAGONAL LINE THROUGH ANY UNUSED LINES IN DATE AND TIME COLUMNS.	SIGNATURE	LICENCE NUMBER

Outstanding Defects:

4 Annual compass calibration is due.

Advisory Items

7 Annual First aid kit inspection due.
8 Life jackets past due for annual inspection by manufacturer.
9 Prop governor leaking oil.
10 Push rod tubes on #4 and #1 cylinders leaking oil.
11 Weld cracked on exhaust muffler outlet support. Not installed on later model exhausts.
17 Cables in RH float for moving landing gear corroded and should be replaced. Lh float cables starting to corrode.
23 Flexible fuel oil and hydraulic lines over 5 years old
25 Engine primer not working properly.
28 Rh stabilizer boot has a rip on bottome side.
29 Lh Stabilizer fwd rib 3rd fom fuselage is cracked.
37 406 ELT not mounted in aircraft to 406 standards.

Skytek A/C SVS LTD.
WO# 1398 2 of 2
A/C Registration: C-GYVZ

Log Date	Tach Time	TTAF	Eng1 TTSN/O	Prop1 TTSN/O	Eng2 TTSN/O	Prop2 TTSN/O
4/23/2014	1089.1	1798.75	966.4	618.85		

Advisory Items

39 Primer line clamp broken. New part on order
40 Rh ob fwd float wire pull pn 3368-28 located in in fwd hole should be in aft hole of strut mount. lh aft wire pull pn 3368-26 in aft hole should be in fwd hole of strut mount
41 Pilots seat bent & doesnt fit seat track properly.

Registration: C-GYVZ **W/O #: 140298** **Date: 24 APRIL, 2014**

MAY light switch (pn. S2160-1); Landing, Taxi, and Beacon light switches (pn. TA201-TW-B) replaced and tested SVC. Parts provided by Skytek Aircraft Services ref. w/o 1398.
ELT (pn. S1820501-01 sn. 2621051-0119) removed, and bench tested SVC IAW CAR 571 App. G / CAR 625 App. C section 12, and latest Mfr. Spec. ELT re-installed and operationally tested SVC.
Next re-certification due: APRIL, 2015 **Battery pack expires: APRIL 2015**

COLDSTREAM Helicopters
www.coldstreamhelicopters.com

Date: 24 APR/14 **Name: S. Murphy**
Signed: S. Murphy **AME#: M790504**
TC Authority: AMO-61-09 **Phone: (778) 475-6224**

The maintenance described has been performed in accordance with the applicable standards of airworthiness.

13d. Name	13e. Date (dd

This certificate does not constitute authority to ins
Installers working in accordance with the national
certifications from the country specified.

**Statements in blocks 13a or 14a do not constitute installation ce
national regulations before the aircraft may be flown.**

MT-018

Coldstream Helicopters Ltd.

AUTHORIZED RELEASE CERTIFICATE

1. Approving national authority/country	2.	3. Form Tracking Number
Transport Canada	**AUTHORIZED RELEASE CERTIFICATE** Form One	1059

4. Approved organisation name and address	5. Work Order/Contract/invoice
Coldstream Helicopters Ltd. 6200 Tronson rd. Vernon, BC. Canada V1H 1N5	140298

6. Item	7. Description	8. Part No.	9. Qty.	10. Serial/batch No.	11. Status/work
1	ELT	S1820501-01	1	2621051-0119	TESTED

12. Remarks

ELT tested SVC IAW CAR 571 App. G. & latest Mfr. Spec.
ICAO code received: C08644
A/C: C-GYVZ
Next re-certification due: APRIL, 2015 Battery pack expires: APRIL, 2015

13a. Certifies that the items identified above were manufactured in conformity to:

☐ Approved design data and are in condition for safe operation.

☐ Non approved design data specified in block 13.

14a.

☒ CAR 571.10 Maintenance release.

☐ Other regulations specified in block 12.

Certifies that unless otherwise specified in block 12, the work identified in block 11 and described in block 12, has been preformed in accordance with Canadian Aviation Regulations.

13b. Signature	13c. Approved Organisation No.	14b. signature	14c. Approved Organisation No.
			81-09
13d. Name	**13e. Date (dd/mmm/yyyy)**	**14d. Name**	**14e. Date (dd/mmm/yyyy)**
		SIMON MURPHY ACA: M790504	16/APR/2014

INSTALLER RESPONSIBILITIES

This certificate does not constitute authority to install.
Installers working in accordance with the national regulations of a country other than that specified in block 1 must ensure that their regulations recognize certifications from the country specified.

Statements in blocks 13a or 14a do not constitute installation certification. In all cases, the technical record for the aircraft must contain an installation certification issued in accordance with the applicable national regulations before the aircraft may be flown.

AIR TIME AND

DATE	DAILY TOTAL		TOTAL AIR TIME SINCE MFG.		ENGINEERING RECORD
	HRS.	MIN.	HRS.	MIN.	NOTE: USE BOTH PAGES AND AS MANY LINES AS REQUIRED FOR COMPLETE
BROUGHT FORWARD					

Skytek A/C SVS LTD.
WO#: 1424
A/C Registration: C-GYVZ

Log Date	Tach Time	TTAF	Eng1 TTSN/O	Prop1 TTSN/O	Eng2 TTSN/O	Prop2 TTSN/O
9/15/2014	1132.5	1836.45	1004.1	656.55		

1 Replace Pn 330 bulb & reglue bulb holder back together on Rh UP gear warning indicator
2 Rear seat back not staying in position-- Found handle on outside not engaged in catch. new spring on order.
3 Replaced landing light bulb PN 4595
4 Remove and regrease all wheel bearings. Installed new 08231-20027 E& 08231-20027 bearings & cones on Rh fwd nose wheel.
5 Greased landing gear grease fittings
6 10 liters of Shell W100 oil installed. Oil sample sent out for anaylisis New CH48108-1 filter installed
7 Fuel filters checked for contaminants. Some fuzz found in gascolator
8 Exhaust seystem inspected visually. no new defects found.
9 Trim wheel indicator wire adjusted 1 groove.
10 Stabilizer trim cables tensioned to 22lbs.
11 Rear MLG oleos checked and nitrogen added.
12 Fuel injector line clamp Pn 652436-1 installed on primer line

THE MAINTENANCE DESCRIBED ABOVE HAS BEEN PERFORMED IN ACCORDANCE WITH THE APPLICABLE AIRWORTHINESS REQUIREMENTS.

Keith Swartz M263199

I HAVE CONDUCTED AN INDEPENDENT CHECK OF CONTROL SYSTEMS DESCRIBED ABOVE FOR CORRECT ASSEMBLY, LOCKING, RANGE OF TRAVEL AND SENSE OF OPERATION

Darian Swartz M367165

13	.0	1849	.5

May 27, 2015 STOLaero aviation inc. **AMO#80-07**

C-GYVZ Cessna A185F S/N 185-03341 WO# 6111 TAT – 1849.5hrs

1. ANNUAL INSPECTION COMPLIED WITH PURSUANT TO THE MAINTENANCE SCHEDULE OUTLINED IN CARS 625 APPENDIX B & C USING THE MANUFACTURERS CHECK SHEETS AS REFERENCE.
2. ENGINE OIL CHANGED, 10 LITRES OF W100 ADDED.
3. ENGINE OIL FILTER P/N AA48108 -2 INSTALLED AND OLD INSPECTED FOR CONTAMINATION, NONE FOUND.
4. ENGINE COMPRESSION CHECK C/W

No 1	No 2	No 3	No 4	No 5	No 6
70	72	72	74	70	72
80	80	80	80	80	80

5. SPARK PLUGS REMOVED, CLEANED, RE-GAPPED, INSPECTED, TESTED AND RE-INSTALLED.
6. PLACARD INSPECTION C/W.
7. TACHOMETER ACCURACY CHECK CARRIED OUT SATISFACTORY.
8. MAGNETIC COMPASS INDICATOR CALIBRATED, NEW COMPASS CARD INSTALLED IN AIRCRAFT.

FOR	N	030	060	E	120	150	S	210	240	W	300	330
STEER	0	30	60	90	120	151	181	211	240	271	301	331

9. FIRST AID KIT CONTENTS INSPECTED SA
10. FIRE EXTINGUISHER INSPECTED OK
11. ELT REMOVED AND ROUTED TO SEBROF AVIATION LTD. FOR RECERT ON W/O 5367 - ELT INSTALLED AND FUNCTION TESTED SATISFACTORY.
12. AIRCRAFT LUBRICATED IAW MANUFACTURERS RECOMMENDATIONS.
13. GEAR SWINGS CARRIED OUT SATISFACTORY
14. WHEEL BEARINGS CHECKED OK –NOT REPACKED AT THIS TIME
15. ELEVATOR DOWN SPRING CABLE PULLEY STIFF – REMOVED ,LUBRICATED AND REINSTALLED
16. AIRCRAFT GROUND RUN AND LEAK CHECK COMPLIED WITH SATISFACTORY
17. *AD CF90-03R2 CABIN HEAT MUFF INSPECTION -- C/W, NO DEFECTS FOUND.*
18. *AD 2011-10-09 SEAT SLIPPAGE INSPECTION --C/W*

THE MAINTENANCE DESCRIBED ABOVE HAS BEEN PERFORMED IAW THE APPLICABLE STANDARDS OF AIRWORTHINESS

BILL ROSS LICENCE M116438

DATE: May 27/2015 **SIGNATURE:** W Dross **LICENSE:**

ENGINEERING RECORD

INSPECTION, REPAIRS & REPLACEMENT ENTRIES. DRAW A DIAGONAL LINE THROUGH ANY UNUSED LINES IN DATE AND TIME COLUMNS.	SIGNATURE	LICENCE NUMBER

KANAGAN TEST RITE

250-545-5951
Vernon, BC

FIRE PROTECTION SYSTEMS RECORD	TESTED/ INSPECTED	ADDITIONAL WORK REQ'D	SEE LOG & REPORT
FIRE ALARM SYSTEM			
EMERGENCY LIGHTING SYSTEM			
SPRINKLER SYSTEM			
HOSE RERACK			
PORTABLE FIRE EXTINGUISHER	✓		
SPECIAL FIRE SUPPRESSION SYSTEM			
KITCHEN FIRE SUPPRESSION SYSTEM			

TECHNICIAN'S STAMP

QF

Ser.# 599080

NEXT SERVICE DUE ON OR BEFORE

Y	M	D
15	4	30

DO NOT REMOVE THIS TAG UNTIL NEW TAG IS APPLIED

J F M A M J J A S O N D
2013 - 2014 - 2015 - 2016 - 2017

AIR TIME AND

DATE	DAILY TOTAL HRS.	DAILY TOTAL MIN.	TOTAL AIR TIME SINCE MFG. HRS.	TOTAL AIR TIME SINCE MFG. MIN.	ENGINEERING RECORD NOTE: USE BOTH PAGES AND AS MANY LINES AS REQUIRED FOR COMPLETE
BROUGHT FORWARD					

Skytek A/C SVS LTD.
WO#: 1556
A/C Registration: C-GYVZ

Log Date	Tach Time	TTAF	Eng1 TTSN/O	Prop1 TTSN/O	Eng2 TTSN/O	Prop2 TTSN/O
7/24/2015	1161.0	1865.3				

3 Greased landing gear when fuel system was checked. (missed putting in entry.)
4 Installed new PN 86255 EGT Probe for #2 cylinder

THE MAINTENANCE DESCRIBED ABOVE HAS BEEN PERFORMED IN ACCORDANCE WITH THE APPLICABLE AIRWORTHINESS REQUIREMENTS

Keith Swartz M263199

Sept. 5/2017	39	.2	1888	.7	DUE To Loss of Journey Log TAT on AND TACH TIME :

September 8, 2017 STOLairus aviation inc. **AMO#80-07**

C-GYVZ Cessna A185F S/N 185-03341 WO# 6542 TAT – 1888.7hrs

1. ANNUAL INSPECTION COMPLIED WITH PURSUANT TO THE MAINTENANCE SCHEDULE OUTLINED IN CARS 625 APPENDIX B & C USING THE MANUFACTURERS CHECK SHEETS AS REFERENCE.
2. ENGINE OIL CHANGED, 10 LITRES OF W100 ADDED.
3. ENGINE OIL FILTER P/N AA48108 -2 INSTALLED AND OLD INSPECTED FOR CONTAMINATION, NONE FOUND
4. ENGINE COMPRESSION CHECK C/W

No 1	No 2	No 3	No 4	No 5	No 6
49	55	70	65	72	70
80	80	80	80	80	80

5. SPARK PLUGS REMOVED, CLEANED, RE-GAPPED, INSPECTED, TESTED AND RE-INSTALLED.
6. PLACARD INSPECTION C/W.
7. TACHOMETER ACCURACY CHECK CARRIED OUT SATISFACTORY
8. MAGNETIC COMPASS INDICATOR CALIBRATED, NEW COMPASS CARD INSTALLED IN AIRCRAFT.

FOR	N	030	060	E	120	150	S	210	240	W	300	330
STEER	0	30	60	90	120	151	181	211	240	271	301	331

9. FIRST AID KIT CONTENTS INSPECTED SATISFACTORY
10. FIRE EXTINGUISHER INSPECTED OK
11. ELT REMOVED –RECERTIFIED BY INLAND COMMUNICATIONS - ELT INSTALLED AND FUNCTION TESTED SATISFACTORY.
12. ALTIMER / TRANSPONDER CHECK C/W –SEE AVIONICS ENTRY
13. AIRCRAFT LUBRICATED IAW MANUFACTURERS RECOMMENDATIONS.
14. GEAR SWINGS CARRIED OUT SATISFACTORY
15. WHEEL BEARINGS REPACKED –LH MAIN OUTBOARD BEARING REPLACED (NOT CHROME PLATED)
16. MIDDLE SEAT REAR HOLD DOWN BRACKETS REPLACED (P/N 1414218-3 & 1414218-4
17. RH FLOAT LOWER FRONT FLYING WIRE ATTACH BRACKET AND LH FLOAT AFT LOWER FLYING WIRE ATTACH BRACKET REPOSTIONED TO CORRECT POSTION AS PER EDO DRAWINGS – FLYING WIRES RETENSIONED
18. AIRCRAFT GROUND RUN AND LEAK CHECK COMPLIED WITH SATISFACTORY
19. *AD CF90-03R2 CABIN HEAT MUFF INSPECTION -- C/W, NO DEFECTS FOUND.*
20. *AD 2011-10-09 SEAT SLIPPAGE INSPECTION --C/W*

E.L ROSS LICENCE # M116438

THE MAINTENANCE DESCRIBED ABOVE HAS BEEN PERFORMED IAW THE APPLICABLE STANDARDS OF AIRWORTHINESS

DATE: Sept. 8/2017 **SIGNATURE:** W D Ross **LICENSE:**

CARRIED FORWARD

INSPECTION, REPAIRS & REPLACEMENT ENTRIES. DRAW A DIAGONAL LINE THROUGH ANY UNUSED LINES IN DATE AND TIME COLUMNS.	SIGNATURE	LICENCE NUMBER
DATE CALCULATED FROM KNOWN AFTIME	W.T. Ross	W.T. ROSS LICENCE M116438

ICS AVIONICS

Inland Communication Services Ltd
2790 Aviation Way
Kamloops B.C. V2B 7W1, AMO 15-74

Aircraft Ident: C-GYVZ
Aircraft Type: A185F
Aircraft Hours: Unknown
Date: **Sept 28, 2017 Re-entry from May 3, 2013**
Aircraft new empty weight: **W&B Deferred**
Aircraft new C of G in Aft of Datum
Work Order # 21372

1. **This is an owner requested statement of work completed from a previous installation/maintenance task due to a lost logbook and entries. This work was completed May 3, 2013.**
2. Fabricate and install harness for Aspen EFD1000 EFIS system (PFD, RSM, Configuration Module) as per Aspen Installation Manual 900-00003-001 Rev AJ and AC43.13-2B Chapter 2 par 207.
3. The Aspen EFD1000 EFIS system is approved under AML STC SA10822SC and an AFMS has been supplied for the POH.
4. The United Altimeter 5934P-1 S/N 3148 and the Aspen EFD1000 PFD have been tested and inspected to 20,000 feet as per Appendix "B" of Chapter 571 of the Canadian Aviation Regulations.
5. The TCI Altitude Encoder SSD120A S/N A71751 and the Garmin Transponder GTX327 S/N 83733906 were bench and ramp checked as per the manufacturers maintenance manual and Appendix F of Chapter 571 of the Canadian Aviation Regulations.
6. The aircraft static system leakage rate has been checked as per Appendix "B"(a)(4)(i) of Chapter 571 of the Canadian Aviation Regulations.
7. The Kannad 406AF ELT S/N 2621051-0019 has been inspected and performance tested as per Appendix "G" of Chapter 571 of the Canadian Aviation Regulations.
8. The avionics have been ramp checked for correct operation.
9. IFR flight subject to satisfactory VFR check flight as per theand Aspen EFD1000 installation manual.

The maintenance described above has been performed in accordance with the applicable standards of airworthiness.

Signed: _____ **ACA:** ICS AVIONICS ACA 04

ICS AVIONICS

Inland Communication Services Ltd
2790 Aviation Way
Kamloops B.C. V2B 7W1, AMO 15-74

Aircraft Ident: C-GYVZ
Aircraft Type: A185F
Aircraft Hours: 1888.7
Date: Aug 11, 2017
Aircraft new empty weight: No Change
Aircraft new C of G in Aft of Datum
Work Order # 25153

1. The United 5934P-1 Altimeter S/N J1740 and the Aspen EFD1000 S/N 11988 have been tested and inspected to 20,000 feet as per Appendix "B" of Chapter 571 of the Canadian Aviation Regulations.
2. The TCI SSD120-30A Altitude Encoder S/N A71751 and the Garmin GTX327 Transponder S/N 83733906 were bench and ramp checked as per the manufacturer's maintenance manual and Appendix F of Chapter 571 of the Canadian Aviation Regulations.
3. The aircraft static system leakage rate has been checked as per Appendix "B"(a)(4)(i) of Chapter 571 of the Canadian Aviation Regulations.
4. The Kannad ELT S/N 2621051-0119 has been inspected and performance tested as per Appendix "G" of Chapter 571 of the Canadian Aviation Regulations.

The maintenance described above has been performed in accordance with the applicable standards of airworthiness.

Signed: _____ **ACA:** ICS AVIONICS ACA 04

AIR TIME AND

DATE	DAILY TOTAL		TOTAL AIR TIME SINCE MFG.		ENGINEERING RECORD NOTE: USE BOTH PAGES AND AS MANY LINES AS REQUIRED FOR COMPLETE
	HRS.	MIN.	HRS.	MIN.	
BROUGHT FORWARD			1888	7	
Oct 1, 2017					Aircraft weighed, New empty weigh
Oct 2, 2017			1888	7	Propeller 10 year overhaul require Deviation letter dated 29 Sept. 2
Dec 1, 2017			1888	7	Propeller extension granted un requirement
Dec 8, 2017	0	4	1889	1	
June 4, 2018			1889	1	Extension to CAR 625 App C Pro by June 30, 2018. TCCA letter dated
June 7, 2018		6	1889	7	
June 10, 2018			1889	7	Engine removed for Repair and propel
					CARRIED FORWARD

INSPECTION, REPAIRS & REPLACEMENT ENTRIES. DRAW A DIAGONAL LINE THROUGH ANY UNUSED LINES IN DATE AND TIME COLUMNS.	SIGNATURE	LICENCE NUMBER
2674 lbs Arm 40.65° AFT Transcribed from JL.	WD. Ross	M116438
extended to December 1, 2017 IAW TCCA Transcribed from JL	WD Ross	M116438
January 15, 2018 to the 10 year overhaul	Joe [illegible]	M320128

December 8, 2017 STOLairus aviation inc. AMO#80-07

C-GYVZ Cessna A185F S/N 185-03341 WO# 6542 TAT – 1889.1hrs

1. ENGINE COMPRESSION RECHECKED AFTER FLIGHT

No 1	No 2	No 3	No 4	No 5	No 6
70	70	70	76	70	74
80	80	80	80	80	80

THE MAINTENANCE DESCRIBED ABOVE HAS BEEN PERFORMED IAW THE APPLICABLE STANDARDS OF AIRWORTHINESS

DATE: Dec 8/2017 SIGNATURE: W D Ross LICENSE: BILL ROSS AVOCE # M116438

[illegible] 10 year overhaul granted. Now due May 30, 2018 by Dave Sward	[illegible]	M320128
removed for overhaul.	[illegible]	M320128

AIR TIME AND

DATE	DAILY TOTAL HRS.	DAILY TOTAL MIN.	TOTAL AIR TIME SINCE MFG. HRS.	TOTAL AIR TIME SINCE MFG. MIN.	ENGINEERING RECORD NOTE: USE BOTH PAGES AND AS MANY LINES AS REQUIRED FOR COMPLETE
BROUGHT FORWARD			1889	7	

September 24, 2018 — STOLAIR Aviation inc. — AMO#80-07

C-GYVZ Cessna A185F S/N 185-03341 WO# 6792 TAT – 1890.9hrs

1. RH MAIN OLEO SERVICED WITH OIL AND RECHARGED
2. OIL FILTER REMOVED –CHECKED FOR CONTAMINATION –NONE FOUND –NEW FILTER P/N AA48109 INSTALLED
3. GROUND RUN AND LEAK CHECK SATISFACTORY

THE MAINTENANCE DESCRIBED ABOVE HAS BEEN PERFORMED IAW THE APPLICABLE STANDARDS OF AIRWORTHINESS

BILL ROSS LICENCE # M116438

DATE: Sept 24/18 SIGNATURE: W D Ross LICENSE:

			1890	9	CARRIED FORWARD

ENGINEERING RECORD

INSPECTION, REPAIRS & REPLACEMENT ENTRIES. DRAW A DIAGONAL LINE THROUGH ANY UNUSED LINES IN DATE AND TIME COLUMNS.	SIGNATURE	LICENCE NUMBER
C-GYVZ CESSNA A185F S/N 18503341 TAT 1889.7 1. IO-550-D13B S/N 284265-R reinstalled after repair by Okanagan Aero Engines. 1050.3 TSOH. 2. Propeller, D3A34C401-C S/N 071108 reinstalled after overhaul by Western Propeller. 3. Propeller Governor, C290D3K/T9 S/N 771094 reinstalled after overhaul by Western Propeller. 4. Airframe electric fuel pump installed new P/N 4140-00-17CJ S/N 17601-17605. 5. All firewall forward fluid flex hoses replaced with new. 6. Engine serviced with 11 liters of Shell W100. 7. Engine runs, and leak checks carried out serviceable. The maintenance described has been accomplished in accordance with the applicable airworthiness requirements. W D Ross — LICENSE NUMBER — BILL ROSS LICENCE # M116438 — Aug. 17/2018 — DATE I have conducted an independent inspection on the powerplant controls affected by the work accomplished. Joe Cote — M320128 — LICENSE NUMBER — Aug 17 2018 — DATE		

AIR TIME AND

DATE	DAILY TOTAL		TOTAL AIR TIME SINCE MFG.		ENGINEERING RECORD
	HRS.	MIN.	HRS.	MIN.	NOTE: USE BOTH PAGES AND AS MANY LINES AS REQUIRED FOR COMPLETE
BROUGHT FORWARD			1890.	9	
2019.02.01	15.	8	1906.	7	
			1906.	7	CARRIED FORWARD

Eagle

D.O.T. APP. No. 65-93

Eagle Aircraft Inc.
Hangar 3
Parry Sound Municipal Airport
Seguin, Ontario
P2A 2W8
Phone: 705-378-4728 • Fax: 705-378-4730

MAINTENANCE RELEASE

W/O No. 6854 NOMENCLATURE: ELT

MFR. KANNAD MODEL 406 AF-Compact

PART No. S1840501-01 SERIAL No. 2621051-0119

NEW ☐ O/H ☐ REP. ☐ MOD. ☐ TESTED ☑ REMOVAL ☐

PREV. CERT. C-GYUZ

THE MAINTENANCE DESCRIBED HAS BEEN PERFORMED IN ACCORDANCE WITH THE APPLICABLE AIRWORTHINESS REQUIREMENTS.

Date: DEC 13, 2018

(Inspector's Signature. Stamp)

Details of outstanding work and other information on reverse.

MAINTENANCE RELEASE

TOTAL TIME _____ TIME SINCE O/H _____

REMARKS

DETAILS OF WORK PERFORMED

tested I.A.W. CAA 571 Appt G

battery due Sept 2021

ADDITIONAL WORK TO BE PERFORMED UPON INSTALLATION

— ARM —

INSTALLED _____ HRS _____ DATE _____

REMOVED _____ HRS _____ DATE _____

TOTAL TIME _____ A/C REG _____

1. Approving National Aviation Authority / Country	2. AUTHORIZED RELEASE CERTIFICATE **FORM ONE**	3. Form Tracking No.
Transport Canada		**18 - 0949**

4. Organization Name and Address	5. Work Order / Contract / Invoice
Woodlawn Instruments Ltd. 200 - 350 Comet Private Ottawa, Ontario K1V 9B2 CANADA	72201

6. Item	7. Description	8. Part No	9. Qty	10. Serial / Batch No.	11. Status / Work
1	MAN / FUEL PRESSURE	6331	1	180812	REPAIRED

12. Remarks

UNIT REPAIRED I.A.W. TECHNICAL PUBLICATION # 5-86

8313a. Certifies that the items identified above were manufactured in conformity to:

☐ Approved design data and are in condition for safe operation

☐ Non approved design data specified in Block 12

14a.

☒ CAR 571.10 Maintenance Release

☐ Other regulations specified in Block 12

Certifies that, except where otherwise specified in Block 12, the work identified in Block 11 and described in Block 12 was performed in accordance with the Canadian Aviation Regulations.

13b. Authorized Signature	13c. Approved Organization Number	14b. Authorized Signature	14c. Approved Organization Number
			189-92
13d. Name	**13e. Date (dd/mmm/yyyy)**	**14d. Name**	**14e. Date (dd/mm/yyyy)**
		Ian Cook	19 /12 / 2018

Installer Responsibilities

This certificate does not constitute authority to install.

Installers working in accordance with the national regulations of a country other than that specified in Block 1 must ensure that their regulations recognize certifications from the country specified.

Statements in Block 13a or 14a do not constitute installation certification. In all cases, the technical record for the aircraft must contain an installation certification issued in accordance with the applicable national regulations before the aircraft may be flown.

1. Approving National Aviation Authority / Country	2. AUTHORIZED RELEASE CERTIFICATE **FORM ONE**	3. Form Tracking No.
Transport Canada		**19 - 0006**

4. Organization Name and Address	5. Work Order / Contract / Invoice
Woodlawn Instruments Ltd. 200 - 350 Comet Private Ottawa, Ontario K1V 9B2 CANADA	72200

6. Item	7. Description	8. Part No	9. Qty	10. Serial / Batch No.	11. Status / Work
1	ATTITUDE GYRO	23-501-06-16 5000B-36	1	T74070M	OVERHAULED

12. Remarks

UNIT OVERHAULED I.A.W. TECHNICAL PUBLICATION 86M024, DWG PKG# 83

8313a. Certifies that the items identified above were manufactured in conformity to:

☐ Approved design data and are in condition for safe operation

☐ Non approved design data specified in Block 12

14a.

☒ CAR 571.10 Maintenance Release

☐ Other regulations specified in Block 12

Certifies that, except where otherwise specified in Block 12, the work identified in Block 11 and described in Block 12 was performed in accordance with the Canadian Aviation Regulations.

13b. Authorized Signature	13c. Approved Organization Number	14b. Authorized Signature	14c. Approved Organization Number
			189-92
13d. Name	**13e. Date (dd/mmm/yyyy)**	**14d. Name**	**14e. Date (dd/mm/yyyy)**
		Ian Cook	07/01/ 2019

Installer Responsibilities

This certificate does not constitute authority to install.

Installers working in accordance with the national regulations of a country other than that specified in Block 1 must ensure that their regulations recognize certifications from the country specified.

Statements in Block 13a or 14a do not constitute installation certification. In all cases, the technical record for the aircraft must contain an installation certification issued in accordance with the applicable national regulations before the aircraft may be flown.

1. Approving Civil Aviation Authority/Country: FAA/United States	2. **AUTHORIZED RELEASE CERTIFICATE** FAA Form 8130-3, AIRWORTHINESS APPROVAL TAG	3. Form Tracking Number: 184077

4. Organization Name and Address:	5. Work Order/Contract/Invoice Number:
AIR PARTS OF LOCK HAVEN P. O. BOX 418 1084 EAST WATER STREET LOCK HAVEN. PA 17745 (QK1R429K)	184077

6. Item:	7. Description:	8. Part Number:	9. Quantity:	10. Serial Number:	11. Status/Work:
1.	AMMETER	440487	1 EA.	184077	OVERHAULED

12. Remarks:
OVERHAULED IN ACCORDANCE WITH AP 86 & AP 230. FULL DETAILS OF WORK CARRIED OUT PER WORK ORDER NO. 184077.

AIR PARTS OF LOCK HAVEN, INC. certifies that all work specified in block 11/12 was carried out in accordance with FAA 145 and in respect to that work the aircraft component is considered ready for release to service under FAA Acceptance Certificate Number: FAA QK1R429K---END---

13a. Certifies the items identified above were manufactured in conformity to:	14a. ☑ 14 CFR 43.9 Return to Service ☐ Other regulation specified in Block 12
☐ Approved design data and are in a condition for safe operation. ☐ Non-approved design data specified in Block 12.	Certifies that unless otherwise specified in Block 12, the work identified in Block 11 and described in Block 12 was accomplished in accordance with Title 14, Code of Federal Regulations, part 43 and in respect to that work, the items are approved for return to service.

13b. Authorized Signature:	13c. Approval/Authorization No.:	14b. Authorized Signature:	14c. Approval/Certificate No.: QK1R429K
13d. Name (Typed or printed):	13e. Date (dd/mmm/yyyy):	14d. Name (Typed or Printed): CHRIS MARTIN	14e. Date (dd/mmm/yyyy): 19 DEC 2018

User/Installer Responsibilities

It is important to understand that the existence of this document alone does not automatically constitute authority to install the aircraft engine/propeller/article.

Where the user/installer performs work in accordance with the national regulations of an airworthiness authority different than the airworthiness authority of the country specified in Block 1, it is essential that the user/installer ensures that his/her airworthiness authority accepts aircraft engine(s)/propeller(s)/article(s) from the airworthiness authority of the country specified in Block1.

Statements in Blocks 13a and 14a do not constitute installation certification. In all cases, aircraft maintenance records must contain an installation certification issued in accordance with the national regulations by the user/installer before the aircraft may be flown.

WARRANTY INFORMATION

Alcor©, Inc. warrants all parts in all new ***Alcor©, Inc.*** products to be free from defects in material and workmanship under normal use and under the following conditions: ***Alcor©, Inc.'s*** obligation under this warranty is limited to the repair or exchange of any defective part, if the part is returned and return shipping prepaid, within **FIVE YEARS** of the date of manufacture for grounded thermocouples and within **ONE YEAR** of the date of manufacture for ungrounded thermocouples.

Alcor©, Inc. is not responsible for any service charges, including removal and reinstallation costs, or any other consequential damages. This warranty is void as to any product damaged as a result of misuse, accident, negligence, unauthorized repairs or handling in transit. If the ***Alcor©, Inc.*** product's serial number or inspection date label has been altered, the warranty is void.

Questions concerning all ***Alcor©, Inc.'s*** products should be directed to Customer Support at **(1-800-354-7233)** or email: **support@alcorinc.com.**

United States Of America
Department of Transportation - Federal Aviation Administration

Supplemental Type Certificate

Number SA522SW

This Certificate issued to: Alcor, Inc.
300 Breesport St.
San Antonio, TX 78216

certifies that the change in the type design for the following product with the limitations and conditions thereto as specified hereon meets the airworthiness requirements of Part 23 of the Federal Aviation Regulations. Parts 3, 4a, 4b of the Civil Air Regulations

Original Product Type Certificate Number: See Limitations and Conditions
Make: See Limitations and Conditions
Model: See Limitations and Conditions

Description of Type Design Change:
Installation of Exhaust Gas Temperature (EGT), Cylinder Head temperature CHT) Components/Systems in accordance with Master Drawing List titled "Alcor Master Drawing LList for STC SA522SW dated November 14, 1984," or later FAA approved revisions.

Limitations and Conditions:
All aircraft equipped with reciprocating engines are eligibile for the installation of the Alcor EGT and CHT Component/Systems.

Compatibility of this modification with previously installed equipment must be determined by installer. If the holder agrees to permit another person to use this certificate to alter the product, the holder shall give the other person written evidence of that permission.

This certificate and the supporting data relied is the basis for approval shall remain in effect until surrendered, suspended, revoked or a termination date is otherwise established by the Administrator of the Federal Aviation Administration.

Date of application: April 15, 1965
Date of issuance: May 26, 1965
Date reissued: 07/05/94; 9/30/02
Date amended: April 10, 1992 Rev. 15

By direction of the Administrator
(Signature)
S. Frances Cox, Manager
Special Certification Office,
Southwest Region
(Title)

Any alteration of this certificate is punishable by a fine of not exceeding $1,000, or imprisonment not exceeding 3 years, or both.

FAA Form 8110-2(10-88) Page 1 of 2 This certificate may be transferred in accordance with FAR 21.47.

FAA-PMA/STC SA 522 SW: This product is FAA approved for installation on **ALL** piston engine aircraft. After installation of complete system, return aircraft to service via Form 337 referencing STC SA 522 SW. This is not required for replacement parts. All piston powered aircraft, regardless of make, are covered by this STC.

Take a Flight to Our Web Site www.alcorinc.com

PN 59180
REV. G, 01/08

EGT Probe

Installation Instructions

FAA/PMA Approved

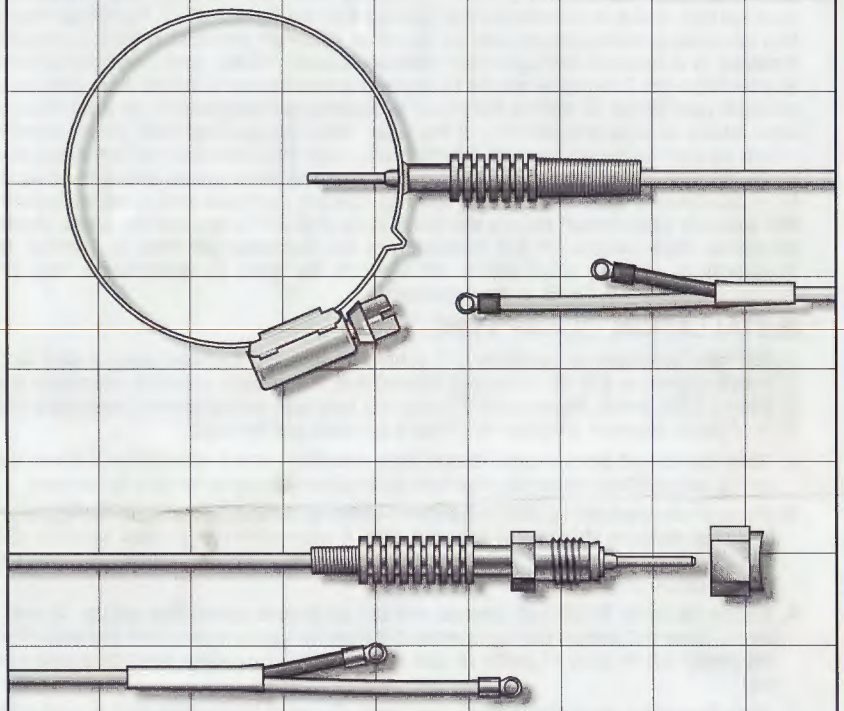

Web site: www.alcorinc.com
E-Mail: support@alcorinc.com

Alcor INCORPORATED

GENERAL INFORMATION

When replacing a thermocouple ensure replacement is same type as one removed by ensuring part number/wire colors match. If stagger does not match use stagger adapter P/N 42523. In a new installation, make sure the location on a single probe (thermocouple) Exhaust Gas Temperature system is in the exhaust pipe of the cylinder that is leanest during full throttle. Particularly in carbureted engines, the leanest cylinder can change when throttle, altitude, carburetor heat, and/or ambient air temperature changes. The leanest cylinder is the one that reaches peak first when leaning from full rich, which is sometimes the cylinder with the highest EGT. Additional information on mixture management can be found in ***Alcor's***® publication EGT Combustion Analysis in a Nutshell and Lycoming Service Bulletin 1094D, and Continental Service Bulletin M89-18. The probe should be located a minimum of 2 inches from the cylinder exhaust port flange (5 inches for highly supercharged engines) in an area free from weld beads or pipe irregularities. If the pipe has a longitudinal weld bead, orient the clamp so that the bead does not interfere with flush fit of shoulder of flange at base of probe tip (gas seal). Determine the location that will allow probe and wire to be free from interference with spark plugs, baffling, cowling, exhaust and other components. For screw-in type ***Alcor***® probes use weld boss, P/N 28113 located the same distance as clamp style probes or 3-5 inches from the turbocharger inlet in Turbine Inlet Temperature sensing applications. All work to be done in accordance with FAA, Advisory Circular 43.13-1B or later revision.

INSTALLATION, CLAMP TYPE

1. For new installations, carefully drill a hole at selected location using a #31 (0.120 inch/3.05mm) or #32 (0.116 inch/2.95mm) drill. If available, carefully ream hole using #30 (0.1285 inch/3.26mm) drill. The correct hole size and alignment assures a press fit of probe element shoulder to prevent exhaust gas leakage.
2. Open clamp and place around exaust pipe ensuring correct orientation of clamp tightening screw. Place probe tip into hole and tighten clamp to remove looseness.
3. While probe element is perpendicular to exhaust carefully push and rotate probe to fully seat element shoulder to exhaust pipe. If necessary use a small wooden dowel and light hammer or other suitable tool to lightly tap clamp at junction of probe body to seat probe shoulder.
4. Torque clamp to 30-35 inch pounds and cut off excess clamp and deburr. To ensure clamp does not loosen during operation it may be safety wired from the end of slotted clamp tab to body of probe or slot in screw may be safety wired to screw housing.
5. Slide fiberglass insulation sleeve over lead. Connect instrument lead to probe lead with screws and nuts ensuring correct stagger/color combinations. Slide sleeve over lead connection and secure with nylon ties.
6. Allow enough slack in probe lead to provide a finger-sized loop (see **Figure 1**) to minimize strain on wire and secure remainder of lead to engine/airframe away from exhaust pipe.

INSTALLATION, SCREW-IN TYPE

1. For new installations, carefully drill a hole at selected location using a #30 drill. Insert probe into weld boss and hand tighten. Insert probe tip into drilled hole and tack weld boss. Remove probe and weld boss to exhaust pipe.
2. Drill a .125 inch hole through the exhaust pipe at the center of the boss taking care not to damage internal threads in boss.
3. Insert element into exhaust no deeper than .75 inch (see **Figure 2**).OPTIONAL- lubricate probe threads with high temperature lubricant (2000°F)
4. Tighten probe nut finger tight, then with appropriate sized wrench tighten an additional 3/4 turn or till snugly locked in place.

Follow steps 5 and 6 above to complete installation.

Typical probes shown, type may vary

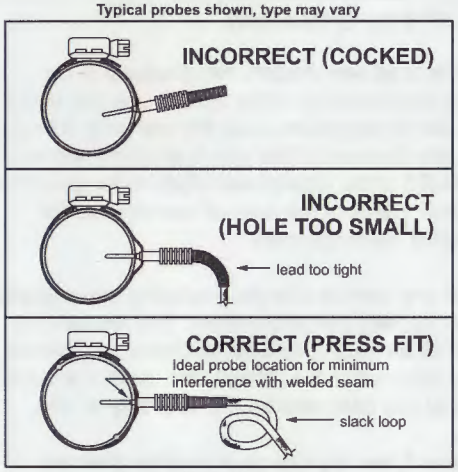

Figure1. Welded Boss Type

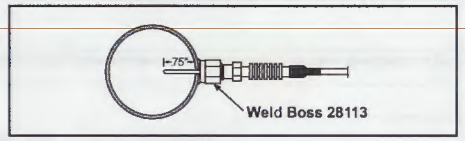

Figure 2. Welded Boss Type

NOTE: This is typically the recommended depth of insertion for all *Alcor*® thermocouples.

FREQUENTLY ASKED QUESTIONS

On a new single probe installation, which cylinder do I install the thermocouple on?

This would be the cylinder where the temperature peaks first while leaning. Not all engines, even of the same make and model, will peak the same due to differences in internal airflow characteristics, carburetion, injection, etc. A worst case scenario would be installing the probe on the richest running cylinder (peaks last) where lean misfire would be reached before peak while leaning.

I installed a new probe and the meter is still dead or went dead again after being in operation for awhile?

First make sure that the correct type of probe was installed by verifying color code matches lead and meter (Type K, Red/Yellow, or Type E, Red/Brown). If that checks all right then disconnect the lead from the meter and measure the loop resistance of the lead and probe and compare it with the value marked on the meter label. If the value is approximately the same then the problem is most likely the calibration potentiometer or the movement in the meter. The old probe removed is probably good! Call ***Alcor*** for repair of meter.

Is there any way I can test a thermocouple without expensive equipment?

Yes, by using an ***ALCAL® 2000*** EGT/CHT System Tester. If not available then measure the loop resistance (see resistance table) of the probe with a digital multi-meter, if available. While viewing display, move probe wire to detect internal wire breaks. If the reading is steady then the probe is probably good. When heated to just turning red, the temperature is about 1550-1650°F.

RESISTANCE AND WEIGHT ARE APPROXIMATE

Alcor® P/N	Type	Color	Resistance @ 70°F	Millivolts at 1550-1650°F	Weight	Size
All Clamp	K	Red/Yellow	.6 -1.0 ohm	34.12 - 36.36 mV	.12 lbs	3.25 max dia.
All Screw-in	K	Red/Yellow	.6 -1.0 ohm	34.12 - 36.36 mV	.12 lbs	call
All Clamp	E	Red/Brown	.7 -1.0 ohm	63.04 - 67.33 mV	.12 lbs	3.25 max dia.
All Screw-in	E	Red/Brown	.8 -1.1 ohms	63.04 - 67.33 mV	.12 lbs	call

300 Breesport
San Antonio, Texas 78216
Phone 210/349/6491
Fax 210/308/8536
Toll free 800/354/7233

LONE STAR
AVIATION CORP.

604 S. Wisteria Street
Mansfield, TX 76063
Ph: (682)518-8882 Fax: (682)518-8831
www.lonestaraviation.com

TSO –C71
POWER ADAPTER
PART NUMBER: LS03-05025

"The conditions and tests required for TSO approval of this article are minimum performance standards. It is the responsibility of those installing this article either on or within a specific type or class of aircraft to determine that the aircraft installation conditions are with the TSO standards. TSO articles must have separate approval for installation in an aircraft. The article may be installed only if performed under 14 CFR part 43 or the applicable airworthiness requirements. There are no approved deviations."

Lone Star Aviation, Corp.
604 S. Wisteria Street
Mansfield, Texas 76063
682-518-8882
682-518-8831 fax

POWER ADAPTER
FAA TSO-C71 APPROVED

REVISION BLOCK					
REV	ECO #	ZONE	DESCRIPTION OF CHANGE(s)	DATE	APPROVED
Rev-0			INITIAL RELEASE	4-4-12	JRM/RLS
Rev-1			New Plug Design	5-16-14	LMD/JRM
Rev-2			Updated Specs, Added Crimp Tool	7-6-16	DPC/JRM
Rev-2.1			Added Items 3a & 7a	12-9-16	DPC/JRM

DWG. NO. LS03-05025 | 1 of 1 | Rev-2.1

Electrical Specifications:

Operating Voltage:	10vDC - 32vDC
Operating Current:	10 Amps - Cont.
	12 Amps - Peak
Circuit Breaker (recommended):	15 Amp
Wire Size (Min. @ max current):	16 AWG
Insulator:	Ceramic Epoxy Core
Connectors: (Pos)	#8 Ring Terminal
(Neg)	.250 Quick Disconnect
Crimp Tool:	FTZ Industries #94130
	Controlled Cycle Crimp Tool

Mechanical Specifications:

Terminal Hardware:	#8-32 Lock Nut (Cadmuim Plated)
Torque Spec:	5-6 in lbs
Mounting Hardware:	#8-32x1/2 Screw PPH or equivalent
Panel Hole Cut Out (Diameter)	
(w/ Mounting Bracket):	1.150 in
(w/o Mounting Bracket):	.890 in

Electrical Connection Installation (See Note 1):

1. Remove Outer Nut (5a), Lock Washer (6), & Ring Terminal (3)
   DO NOT Loosen Inner Nut (5b)
   This nut is torqued to factory specs
2. Crimp appropriate gauge wire to cooresponding gauge Ring Terminal (3) or (3a)
3. Reinstall Ring Terminal (3) or (3a), Lock Washer (6) & Outer Nut (5a).
4. Firmly hold Inner Nut (5b) while tightening Outer Nut (5a) to prevent Inner Nut from turning
   Torque to 5 to 6 inch/lbs.
5. Crimp appropriate gauge wire to cooresponding gauge Quick Disconnect Terminal (7) or (7a)

Mechanical Installation:

A: (with Mounting Bracket)

1. Tighten outer sleeve (B) around inner housing (A)
   Add Loctite 242 to threads of housing
2. Drill 1.150in Dia hole in panel
3. Attach with #8-32 Philips Pan Head screws

B: (without Mounting Bracket)

1. Unthread outer sleeve (B) from inner housing (A)
2. Remove and discard mounting bracket (1b)
3. Place assembly into panel hole and reinstall spacer (1a) and outer sleeve (B) using Loctite 242
4. Check alignment of rubber Cap (2,2a,2b) and tighten outer sleeve (B)

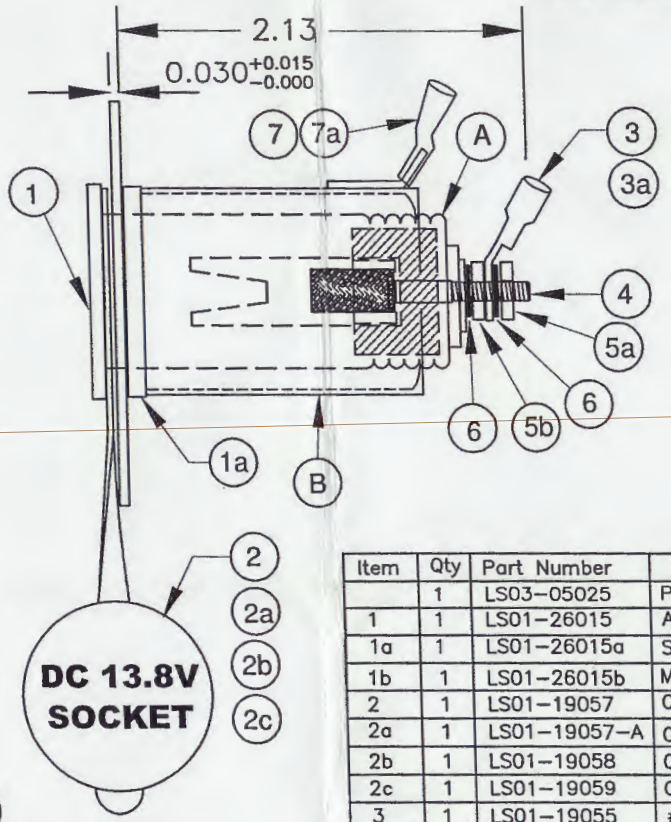

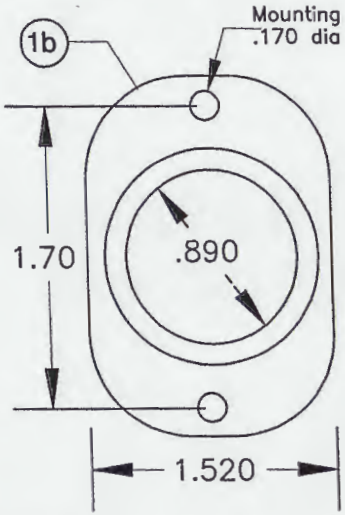

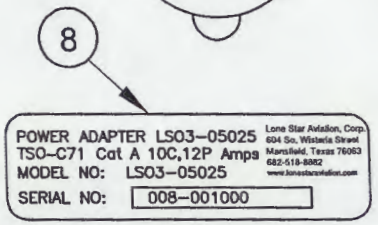

Item	Qty	Part Number	Description
	1	LS03-05025	Power Adapter (FAA TSO-C71)
1	1	LS01-26015	Assembly: Housing (A), Sleeve (B)
1a	1	LS01-26015a	Spacer
1b	1	LS01-26015b	Mounting Bracket
2	1	LS01-19057	Cap Rubber 13.8V
2a	1	LS01-19057-A	Cap Rubber Blank (Optional)
2b	1	LS01-19058	Cap Rubber 12.0V (Optional)
2c	1	LS01-19059	Cap Rubber 28V (Optional)
3	1	LS01-19055	#8 Ring Terminal, 14-16 AWG, w/shrink tube
3a	1	LS01-19055A	#8 Ring Terminal, 18-22 AWG, w/shrink tube
4	1	LS01-13009	#8-32 screw x 1" TP
5a,5b	2	LS01-19005	#8-32 Hex Nut (Cadmium Plated)
6	2	LS01-19006	#8 Lock Washer
7	1	LS01-19056	Quick Disconnect, 14-16 AWG, .250 FM, w/shrink tube
7a	1	LS01-19056A	Quick Disconnect, 18-22 AWG, .250 FM, w/shrink tube
8	1	LS01-21996	Power Adapter Label, TSO-C71

Note 1
Recommended References:
FAA AC 43.13-1B
Acceptable Methods, Techniques and Practices-Aircraft Inspection and Repair, Chapter 11
FAA AC 43.13-2B
Acceptable Methods, Techniques and Practices-Aircraft Alterations

UNLESS NOTED OTHERWISE TOLERANCE BLOCK: DIMENSIONS ARE IN INCHES
DECIMALS: XX ±.030, XXX ±.015, XXXX ±.0005
ANGULAR ±1°

DO NOT SCALE DRAWING

MATERIAL N/A

FINISH N/A

PROPRIETARY
THIS DOCUMENT AND THE DATA DISCLOSED HEREWITH IS NOT TO BE REPRODUCED, USED, OR DISCLOSED IN WHOLE OR IN PART TO ANYONE WITHOUT WRITTEN AUTHORIZATION FROM LONE STAR AVIATION

APPROVALS	DATE
DRAWN: DPC	7-6-16
APPROVED: JRM	7-6-16
NEXT ASSY.	

LONE STAR AVIATION CORP.
Mansfield, Texas

TITLE
Cigarette Lighter Adapter Install
LS03-05025, LS03-05025-12V
LS03-05025-28V LS03-05025-BB

SIZE	DRAWING NO.	REV
A	LS03-05025	2.1

SCALE NONE | SHEET 1 OF 1

MM-113-3/8" Advisory Instruments only

IMPORTANT SAFETY INSTALLATION INFORMATION

MUST read before installing the MM-113-3/8" CHT Probe

Install the MM-113-3/8" CHT Probe as follows:

1. **Remove the Primary CHT Probe (or Heater Probe).**
2. **Place the Primary CHT Probe (or Heater Probe) into the MM-113-3/8" CHT Probe.**
3. **Install the Fire Sleeve over the MM-113-3/8" CHT Probe wire and the Primary CHT Probe (or Heater Probe) wire.**
4. **Reinstall the Primary CHT Probe (or Heater Probe). Place the Crush Washer between the Primary CHT Probe and the MM-113-3/8" CHT Probe. The Crush Washer must crush and hold the MM-113-3/8" Probe. The Probe point on the MM-113-3/8" CHT Probe must be in contact with the metal on the cylinder head.**
5. **Tie Wrap MM-113-3/8" CHT Probe wire to the Primary CHT Probe (or Heater Probe) wire.**

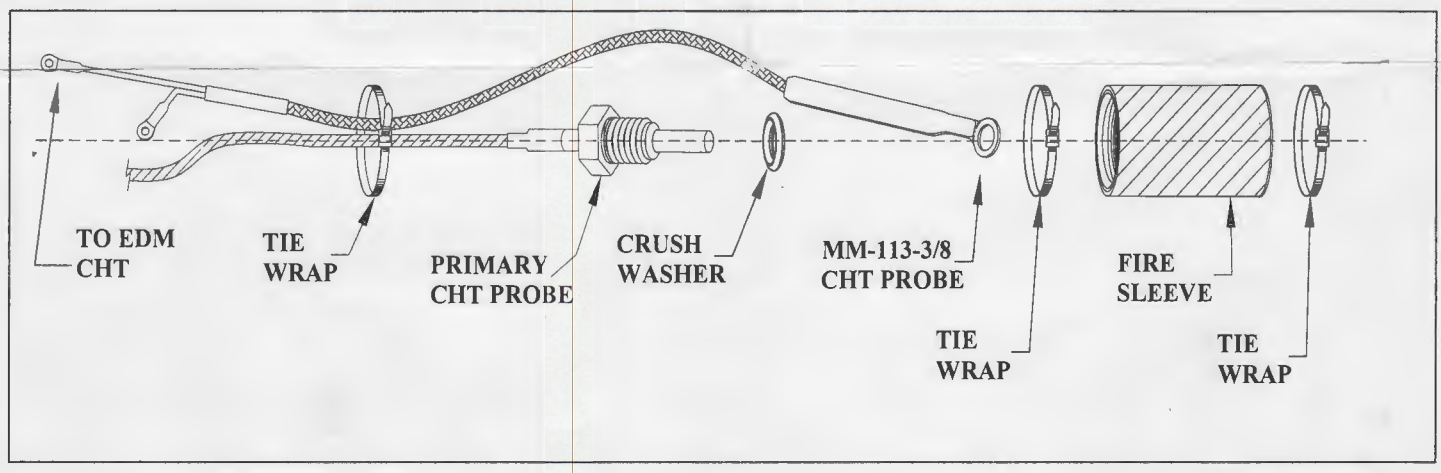

6. **Slip the Fire Sleeve over the MM-113-3/8" CHT Probe and the Primary CHT Probe (or Heater Probe). Insure the Fire Sleeve is over both probes and touching cylinder head.**
7. **Tie Wrap the Fire Sleeve into place.**

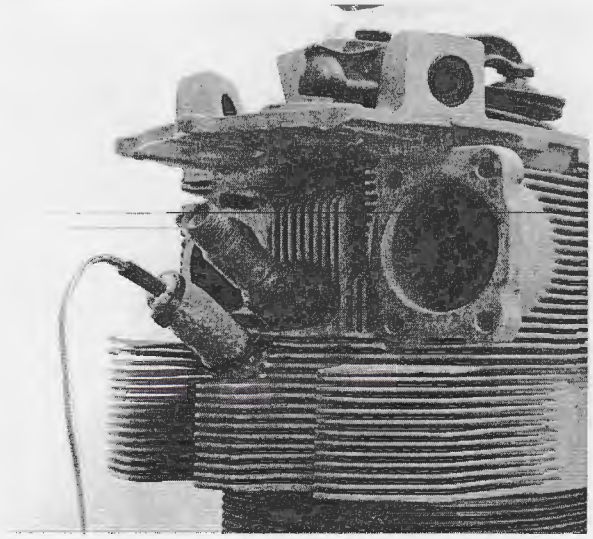

8. Perform a ground run on the engine and insure both probes are operating properly.

ENGINEERING RECORD

CENTRAL AERO
centralaero@rogers.com

CENCE
JMBER

C-GYVZ — Cessna A185F
February 1, 2019 — S/N 18503341
WO#18-P58 — TTAF: 1906.7

- Annual inspection carried out on amphibs IAW CAR STD 625 appendix B&C
- Differential compression: 1.73/80 2.73/80 3.75/80 4.71/80 5.74/80 6.75/80
- Oil change carried out. Engine serviced with 10qts AeroShell W100.
- Oil filter replaced P/N CH48108-1. Interior of old filter checked - no contaminants found
- Induction filter replaced P/N BA8103-1
- Engine ground run and leak checked - all parameters normal/no leaks
- LH forward engine baffle re and re. Corrected orientation of inner portion of baffle by bending it back to original.
- Secured propeller governor cable by installation of a tab and cushion clamp on aft portion of the engine oil pan. Rigging is unaffected.
- Primer nozzles and plunger assembly cleaned. Lines cleared by compressed air. Installed new plunger o-rings (2) P/N MS29513-012. Primer system checked - serviceable
- Lower fuel strainer o-rings replaced P/Ns MS29513-111 & -138. Injector screen checked and cleaned. Transfer pump screens checked and cleaned.
- Adjusted fuel boost pump pressures to MM specs.
- Ship battery replaced. Concorde RG35AXC S/N 40971122 installed.
- Repaired instrument cluster lighting by replacement of bulbs on lower clusters (2) P/N 336 and re-connecting wire at LH forward doorpost.
- Cigar lighter replaced with Lonestar LS03-05025 13.8V DC power adapter. Unit installed IAW Lonestar Dwg LS03-05025 using a 10A inline fuse for circuit protection
- Existing high voltage light connected to existing wiring, light checked - serviceable
- Ammeter P/N 440487 re and re to facilitate overhaul at Air Parts of Lockhaven WO#184077.
- Replaced oil temperature wire from existing butt connector forward of firewall to probe. Wire secured with cushion clamps on oil pan tabs.
- Primary EGT probe installed P/N 86255. Existing wiring attached and secured to engine mount.
- Corrected installation position of Primary CHT probe to #1 cylinder (see TCDS). Replaced primary probe P/N 3080-38 and installed new JPI M-113-3/8" probe at base of Primary Probe. All affected wiring secured accordingly.
- Fuel Flow / Manifold Pressure gauge P/N 6331 S/N 180812 re and re to facilitate repairs at Woodlawn Instruments WO#72201.
- Attitude gyro P/N 5000B-36 S/N T74070M re and re to facilitate overhaul at Woodlawn Instruments WO#72200.
- Central suction and relief filters replaced with new P/Ns RA-D-9-14-5 & ARB3-5-1. Reoriented relief valve for ease of adjustment. Suction adjusted to specification.
- Replaced LH IB rudder bar bearing set P/N S1675-1.
- Removed blockage from LH static port
- Replaced both Rosen Visor lenses (2) P/N R1180301-001 and re-oriented installation to be IAW Rosen ICAs. (modification previously embodied)
- Replaced both Door Steward gas shocks (2) P/N 201C101-1. (modification previously embodied)
- Replaced brake linings on LH brake calliper (4) P/N RA66-106. Re-sealed both brake callipers using (4) P/N MS28775-218. Brakes bled with MIL-H5606-PRF.
- Cleaned forward oleo steering bushings, lubricated assemblies and adjusted turning force to MM specs.
- Oleo and tire pressures set LH oleo serviced with MIL-H5606-PRF. qt
- Replaced pumpout housing on LH float forward of hatch.
- Secured loose pumpout hose in RH float hatch.
- Float structure and rigging inspected - no faults found. Gear swings carried out - no faults found.
- Replaced cabin heat inlet duct from forward baffle to shroud inlet using SCAT-12
- Reiff Turbo XP engine preheater P/N TXPL6 with oil cooler option P/N OC installed IAW Installation and Operating Instruction documents INST CH 2018-06 and INST HS 2018-09.
- Compass swing carried out:

FOR	000	030	060	090	120	150
STEER	001	031	062	091	120	149
FOR	180	210	240	270	300	330
STEER	182	212	241	271	301	332

~~C-FYVZ~~ February 1, 2019

- ELT recertification carried out at Eagle Aircraft WO#6854. Unit installed armed - satisfactory self test completed
- Tachometer checked - within limits
- Fire extinguisher checked, gauge reads green, mount is secure - OK for service
- AD CF-90-03R2 exhaust type cabin heat inspection C/W - no defects found
- AD 2011-10-09 seats slipping C/W - within spec, serviceable
- AD 79-08-03 electrical system C/W - circuit protection to Cigar lighter installed inline
- AD CF-73-05 rudder pedal torque tube C/W - no defects noted
- Weight & Balance and equipment list amended for installation of pre-heater kit and non-OEM 12V source
- Dual inspection carried out on LH IB rudder bearing installation/safety.

CONTROL SYSTEMS AFFECTED HAVE BEEN INSPECTED FOR CORRECT INSTALLATION, RANGE OF MOVEMENT, SAFETY AND SENSE OF OPERATION

Kurt Bernt

THE MAINTENANCE DESCRIBED ABOVE HAS BEEN PERFORMED IN ACCORDANCE WITH THE APPLICABLE STANDARDS OF AIRWORTHINESS

M757016

AIR TIME AND

DATE	DAILY TOTAL HRS.	DAILY TOTAL MIN.	TOTAL AIR TIME SINCE MFG. HRS.	TOTAL AIR TIME SINCE MFG. MIN.	ENGINEERING RECORD NOTE: USE BOTH PAGES AND AS MANY LINES AS REQUIRED FOR COMPLETE
BROUGHT FORWARD			1906	7	
2019.02.20	0		1906	7	
			1906	7	
2019.04.24	11	1	1917	8	
			1917	8	
2019.06.11	20	9	1938	7	
			1938	7	
2019.06.19	0		1938	7	
			1938	7	
			1938	7	CARRIED FORWARD

1.. Approving Civil Aviation Authority/Country	2.	3. Form Tracking No.
Transport Canada	AUTHORIZED RELEASE CERTIFICATE FORM ONE	OR19-011

4. Organization Name and Address	5. Work Order/Contract/Invoice
ORILLIA AVIATION 6422 BLUEBIRD STREET, ORILLIA, ONTARIO, CANADA, L3V 6H6	CGYVZ

6. Item	7. Description	8. Part No	9. Qty	10. Serial/Batch No	11. Status/work
Transponder	Garmin GTX 327	011-00490-00	1	83733906	Inspected and Tested

12. Remarks

Recertification IAW CARS 571 Appendix F

13a. Certifies that the items identified above were manufactured in conformity to:

- ☐ approved design data and are in condition for safe operation
- ☐ non approved design data specified in block 12.

14a.

- ☒ CAR 571.10 Maintenance Release
- ☐ Other regulation specified in block 12

Certifies that unless otherwise specified in block 12, the work identified in block 11 and described in block 12, has been performed in compliance with the *Canadian Aviation*

13b. Signature	13c. Approved Organization Number	14b. Signature	14c. Approved Organization Number
		Owen Reese	**337-92**
13d. Name	13e. Date (dd/mmm/yyyy)	14d. Name Owen Reese	14e. Date (dd/mmm/yyyy) 20 Feb 2019

Installer Responsibilities

This certificate does not constitute authority to install.

Installers working in accordance with the national regulations of a country other than that specified in block 1 must ensure that their regulations recognize certifications from the country specified.

Statements in blocks 13a or 14a do not constitute installation certification. In all cases, the technical record for the aircraft must contain an installation certification issued in accordance with the applicable national regulations before the aircraft may be flown.

1.. Approving Civil Aviation Authority/Country	2.	3. Form Tracking No.
Transport Canada	AUTHORIZED RELEASE CERTIFICATE FORM ONE	OR19-012

4. Organization Name and Address	5. Work Order/Contract/Invoice
ORILLIA AVIATION 6422 BLUEBIRD STREET, ORILLIA, ONTARIO, CANADA, L3V 6H6	CGYVZ

6. Item	7. Description	8. Part No	9. Qty	10. Serial/Batch No	11. Status/work
Transponder	Garmin GTX 327	011-00490-00	1	83733906	Inspected and Tested

12. Remarks

Correlation/Static leak check carried out with altimeter s/n J1740, Aspen PFD s/n 11988, Encoder s/n A71751 IAW CARS 571 Appendix F and G

13a. Certifies that the items identified above were manufactured in conformity to:

- ☐ approved design data and are in condition for safe operation
- ☐ non approved design data specified in block 12.

14a.

- ☒ CAR 571.10 Maintenance Release
- ☐ Other regulation specified in block 12

Certifies that unless otherwise specified in block 12, the work identified in block 11 and described in block 12, has been performed in compliance with the *Canadian Aviation*

13b. Signature	13c.Approved Organization Number	14b. Signature	14c. Approved Organization Number
		Owen Reese	**337-92**
13d. Name	13e. Date (dd/mmm/yyyy)	14d. Name	14e. Date (dd/mmm/yyyy)
		Owen Reese	20 Feb 2019

Installer Responsibilities

This certificate does not constitute authority to install.

Installers working in accordance with the national regulations of a country other than that specified in block 1 must ensure that their regulations recognize certifications from the country specified.

Statements in blocks 13a or 14a do not constitute installation certification. In all cases, the technical record for the aircraft must contain an installation certification issued in accordance with the applicable national regulations before the aircraft may be flown.

1. Approving Civil Aviation Authority/Country:	2.	3. Form Tracking Number:
FAA/UNITED STATES	**AUTHORIZED RELEASE CERTIFICATE** FAA Form 8130-3, AIRWORTHINESS APPROVAL TAG	H-S113357

4. Organization Name and Address:	5. Work Order/Contract/Invoice Number:
HARTZELL ENGINE TECHNOLOGIES, 2900 SELMA HWY. MONTGOMERY, AL. 36108 PQ1383CE-D	M483530

6. Item:	7. Description:	8. Part Number:	9. Quantity:	10. Serial Number:	11. Status/Work:
1	STARTER **** END ****	C12ST5	1	H-S113357	NEW

12. Remarks:

AIRWORTHINESS APPROVAL- PARTS.FOR PMA ELIGIBILITY SEE WWW.HARTZELL.AERO/PMA/

13a. Certifies the items identified above were manufactured in conformity to:	14a. ☐ 14 CFR 43.9 Return to Service ☐ Other regulation specified in Block 12
☒ Approved design data and are in a condition for safe operation. ☐ Non-approved design data specified in Block 12.	Certifies that unless otherwise specified in Block 12, the work identified in Block 11 and described in Block 12 was accomplished in accordance with Title 14, Code of Federal Regulations, part 43 and in respect to that work, the items are approved for return to service.

13b. Authorized Signature:	13c. Approval/Authorization No.:	14b. Authorized Signature:	14c. Approval/Certificate No:
	PQ1383CE-D		
13d. Name (Typed or Printed):	**13e. Date (dd/mmm/yyyy):**	**14d. Name (Typed or Printed):**	**14e. Date (dd/mmm/yyyy):**
JAMES D. MURPHY	11/Dec/2018		

User/Installer Responsibilities

It is important to understand that the existence of this document alone does not automatically constitute authority to install the aircraft engine/propeller/article.

Where the user/installer performs work in accordance with the national regulations of an airworthiness authority different than the airworthiness authority of the country specified in Block 1, it is essential that the user/installer ensures that his/her airworthiness authority accepts aircraft engine(s)/propeller(s)/article(s) from the airworthiness authority of the country specified in Block 1.

Statements in Block 13a and 14a do not constitute installation certification. In all cases, aircraft maintenance records must contain an installation certification issued in accordance with the nationalr egulations by the user/installer before the aircraft may be flown.

HETCODE: C12ST5

INSTALLATION INSTRUCTIONS:

1. DISCONNECT POWER CABLE AND UNBOLT OLD STARTER FROM ENGINE.
2. INSTALL NEW STARTER USING EXISTING NUTS AND WASHERS.
3. TIGHTEN NUTS TO TORQUE SHOWN IN TCM "ENGINE OVERHAUL MANUAL".
4. ATTACH POWER CABLE TO THE POWER TERMINAL ON THE STARTER USING HARDWARE SUPPLIED. TIGHTEN TO 50 IN-LBS.
5. INSTRUCTIONS FOR CONTINUED AIRWORTHINESS: THE STARTER MAY BE OVERHAULED AT 2700 HOURS OR WHEN A MAJOR OVERHAUL IS PERFORMED ON THE ENGINE ON WHICH IT IS INSTALLED. NO OTHER MAINTENANCE IS REQUIRED OR RECOMMENDED.
6. IF DURING INSTALLATION IT IS NOTED THAT THE SOLENOID WILL INTERFERE WITH OTHER COMPONENTS, THE SOLENOID CAN BE REORIENTED BY REMOVING THE THREE (3) 1/4-20 CAP SCREWS AND ROTATING THE STARTER BODY IN THE FLANGE TO A SET OF HOLES THAT WILL PROVIDE CLEARANCE. NOTE THAT THE PATTERN OF HOLES WILL ALLOW 40° INCREMENTS AND IF THE MOUNTING FLANGE IS ROTATED 180°, THE 40° CAN BE OFFSET BY 20°. THIS WILL ALLOW THE SOLENOID TO BE LOCATED IN ANY OF 18 POSITIONS.
7. IN CASES WHERE THE STARTER CONTACTOR IS MOUNTED TO THE ORIGINAL STARTER, THE ST5'S SOLENOID CAN BE USED IN ITS PLACE BY REMOVING THE JUMPER AND CONNECTING THE WIRE FROM THE START SWITCH TO THE 'S' TERMINAL.

REVISIONS				
ECO	REV.	DESCRIPTION	BY	DATE
123515	D	1) REDRAWN IN SOLIDWORKS; 2) FORMAT: HET WAS SKYTEC; 3) DESCRIPTION: CHANGED TO "ST5 INSTALLATION INSTRUCTIONS"; 4) REMOVED PMA LABEL GRAPHIC	EAB	10/20/16

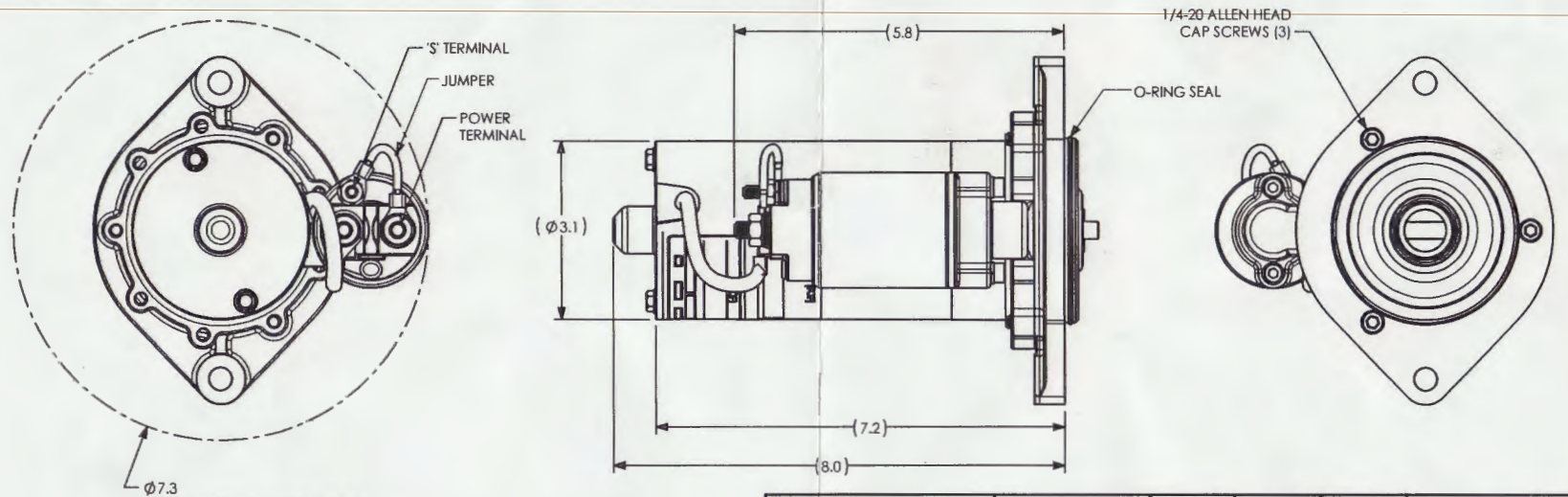

◇D

USER IS RESPONSIBLE FOR VERIFICATION OF CURRENT REVISION BEFORE USING THIS DOCUMENT. DOCUMENT CONSIDERED "REFERENCE ONLY" IF NOT THE CURRENT REVISION.

SPECIFICATION CLASSIFICATION		
CLASSIFICATION	DIMENSION CONVENTION	NOTE NO. CONVENTION
CRITICAL	<XX.XX>	<#>
MAJOR	[XX.XX]	[#]
MINOR	XX.XX	#
REFERENCE	(XX.XX)	(#)

UNLESS OTHERWISE SPECIFIED

DIMENSIONS ARE IN INCHES AND APPLY AFTER HEAT TREAT AND PLATING

.X = ±.015
.XX = ±.010 ANGLES ±1°
.XXX = ±.005

BREAK ALL EDGES AND MACHINE ALL INSIDE CORNER FILLETS .015 MAX.

SURFACE FINISH 125

THIS DRAWING CONTAINS INFORMATION THAT IS CONFIDENTIAL AND PROPRIETARY TO HARTZELL ENGINE TECHNOLOGIES. THIS DRAWING IS FURNISHED ON THE UNDERSTANDING THAT THE DRAWING AND THE INFORMATION IT CONTAINS WILL NOT BE COPIED OR DISCLOSED TO OTHERS EXCEPT WITH THE WRITTEN CONSENT OF HARTZELL ENGINE TECHNOLOGIES, WILL NOT BE USED TO THE DETRIMENT OF HARTZELL ENGINE TECHNOLOGIES, AND WILL BE RETURNED UPON REQUEST BY HARTZELL ENGINE TECHNOLOGIES.

GEOMETRIC SYMBOLS PER ANSI Y14.5

FLATNESS
STRAIGHTNESS
ROUNDNESS
CYLINDRICITY
PROFILE
PERPENDICULARITY
POSITION
CONCENTRICITY
SYMMETRY
ANGULARITY
PARALLELISM
CIRCULAR RUNOUT
TOTAL RUNOUT

SCALE 1:2

DRAWN	EAB	10/20/16
ENGINEER	K. NORD	
APPRVD.	123515	
FINISH	N/A	
WEIGHT	N/A	
MATERIAL	N/A	

HARTZELL ENGINE TECHNOLOGIES
2900 Selma Highway
Montgomery, AL 36108

◇D

ST5 INSTALLATION INSTRUCTIONS ◇D

SIZE	SH 1 OF 1	CODE ID	DRAWING NO.	REV.
B		65PY1	ST60001	D

INSPECTION, REPAIRS & REPLACEMENT ENTRIES. DRAW A DIAGONAL LINE THROUGH ANY UNUSED LINES IN DATE AND TIME COLUMNS.	SIGNATURE	LICENCE NUMBER

CENTRAL AERO
centralaero@rogers.com

C-GYVZ
February 20, 2019
WO#19-na

Cessna A185F
S/N 18503341
TTAF: 1906.7

- Biannual transponder and altimetry checks carried out by Orillia Aviation. Form 1 tracking numbers OR19-011 & OR19-012. Altimeter S/N J1740, EFD S/N 11988, Transponder S/N 83733906 & Encoder S/N A71751

THE MAINTENANCE DESCRIBED ABOVE HAS BEEN PERFORMED IN ACCORDANCE WITH THE APPLICABLE STANDARDS OF AIRWORTHINESS
M757016

CENTRAL AERO
centralaero@rogers.com

C-GYVZ
April 24, 2019
WO#19-na

Cessna A185F
S/N 18503341
TTAF: 1917.8

- LH lower brake flex lines repaired by replacement of flex hose P/N 303-4 and (2) 491 fitting assemblies as needed. Hoses pressure tested IAW AC43.13-1B section 9-30(i) to 2000PSI - serviceable.
- LH brake calliper re and re, cleaned and inspected - serviceable. Replaced o-rings (2) P/N MS28775-118
- LH brake actuator repaired by replacement of o-ring and lock-o-seal P/Ns MS28775-110 & 800-001-6.
- LH brake bled using MIL-H5606-PRF
- LH tip tank re and re to facilitate replacement of transmitter gasket.
- Tire pressures set.

THE MAINTENANCE DESCRIBED ABOVE HAS BEEN PERFORMED IN ACCORDANCE WITH THE APPLICABLE STANDARDS OF AIRWORTHINESS
M757016

CENTRAL AERO
centralaero@rogers.com

C-GYVZ
June 11, 2019
WO#19-na

Cessna A185F
S/N 18503341
TTAF: 1938.7

- LH main tire and tube replaced. AirHawk 6.00-6 6ply and GL-6020B installed.
- LH main wheel disassembled, cleaned and inspected - IB bearing showing slight corrosion on cage, otherwise serviceable. Lubricated bearings and re-filled wheel with grease.
- Airspeed indicator removed for repairs. Loaner airspeed installed as reference only, unit placarded, markings are incorrect, ASPEN is primary source for airspeed indication. Pitot/static systems checked for leaks IAW CAR STD 571 appendix B - within limits.
- Suction adjusted.

THE MAINTENANCE DESCRIBED ABOVE HAS BEEN PERFORMED IN ACCORDANCE WITH THE APPLICABLE STANDARDS OF AIRWORTHINESS
M757016

CENTRAL AERO
centralaero@rogers.com

C-GYVZ
June 19, 2019
WO#19-na

Cessna A185F
S/N 18503341
TTAF: 1938.7

- Replaced LH IB wheel bearing P/N 13889 and re-greased wheel assembly
- RH main wheel disassembled, cleaned and inspected - found serviceable. Replaced tube P/N GL-6020B, lubricated bearings and re-assembled all.
- Starter motor replaced. OEM model 646238 starter removed. Sky-Tec model C12ST5 S/N H-S11357 installed IAW ST5 Installation Instruction ST60001 revD dated 10/20/16.
- Weight & Balance and Equipment List amendment #2 carried out for installation.

THE MAINTENANCE DESCRIBED ABOVE HAS BEEN PERFORMED IN ACCORDANCE WITH THE APPLICABLE STANDARDS OF AIRWORTHINESS
M757016

AIR TIME AND

DATE	DAILY TOTAL HRS.	DAILY TOTAL MIN.	TOTAL AIR TIME SINCE MFG. HRS.	TOTAL AIR TIME SINCE MFG. MIN.	ENGINEERING RECORD NOTE: USE BOTH PAGES AND AS MANY LINES AS REQUIRED FOR COMPLETE
BROUGHT FORWARD			1938	7	
2019.07.02	20	9	~~1958~~	1959	6.
			1959.	6	
2019.08.30	17	1	1976.	7	
			1976.	7	
2019.11.15	7.	8	1984.	5	
			1984.	5	
			1984.	5	CARRIED FORWARD

1. Approving National Aviation Authority / Country	2. AUTHORIZED RELEASE CERTIFICATE **FORM ONE**	3. Form Tracking No.
Transport Canada		**19 - 0567**

4. Organization Name and Address	5. Work Order / Contract / Invoice
Woodlawn Instruments Ltd. 200 - 350 Comet Private Ottawa, Ontario K1V 9B2 CANADA	77785

6. Item	7. Description	8. Part No	9. Qty	10. Serial / Batch No.	11. Status / Work
1	AIRSPEED INDICATOR	EA-5172-13-CES EA-5172	1	10584	REPAIRED

12. Remarks

UNIT REPAIRED I.A.W. TECHNICAL PUBLICATION # 86M030 & DWG PKG # 99

8313a. Certifies that the items identified above were manufactured in conformity to:

☐ Approved design data and are in condition for safe operation

☐ Non approved design data specified in Block 12

14a.

☒ CAR 571.10 Maintenance Release

☐ Other regulations specified in Block 12

Certifies that, except where otherwise specified in Block 12, the work identified in Block 11 and described in Block 12 was performed in accordance with the Canadian Aviation Regulations.

13b. Authorized Signature	13c. Approved Organization Number	14b. Authorized Signature	14c. Approved Organization Number
			189-92
13d. Name	**13e. Date (dd/mmm/yyyy)**	**14d. Name**	**14e. Date (dd/mm/yyyy)**
		Ian Cook	22 / 07 / 2019

Installer Responsibilities

This certificate does not constitute authority to install.

Installers working in accordance with the national regulations of a country other than that specified in Block 1 must ensure that their regulations recognize certifications from the country specified.

Statements in Block 13a or 14a do not constitute installation certification. In all cases, the technical record for the aircraft must contain an installation certification issued in accordance with the applicable national regulations before the aircraft may be flown.

INSPECTION, REPAIRS & REPLACEMENT ENTRIES. DRAW A DIAGONAL LINE THROUGH ANY UNUSED LINES IN DATE AND TIME COLUMNS.	SIGNATURE	LICENCE NUMBER

CENTRAL AERO
centralaero@rogers.com

C-GYVZ
July 2, 2019
WO#19-na

Cessna A185F
S/N 18503341
TTAF: 1959.6

- Oil change carried out. Engine serviced with 9qts AeroShell W100.
- Oil filter replaced P/N CH48108-1. Interior of old filter checked - no contaminants found
- Fuel injector nozzles cleaned.
- LH front oleo serviced with MIL-H5606-PRF and Nitrogen

THE MAINTENANCE DESCRIBED ABOVE HAS BEEN PERFORMED IN ACCORDANCE WITH THE APPLICABLE STANDARDS OF AIRWORTHINESS
M757016

CENTRAL AERO
centralaero@rogers.com

C-GYVZ
August 30, 2019
WO#19-na

Cessna A185F
S/N: 18503341
TTAF: 1976.7

- LH strobe flash tube replaced P/N 073-0270. Strobes checked - serviceable
- Replaced AN816-4D nipple at LH brake calliper. Brake bled with MIL-H5606-PRF.
- Loaner airspeed indicator removed. Original airspeed indicator P/N EA-5172-13-CES S/N 10584 installed following repairs at Woodlawn Instruments WO#77785.
- Pitot and Static systems checked IAW CAR STD 571 appendix B - leak rate is within limits

THE MAINTENANCE DESCRIBED ABOVE HAS BEEN PERFORMED IN ACCORDANCE WITH THE APPLICABLE STANDARDS OF AIRWORTHINESS
M757016

CENTRAL AERO
centralaero@rogers.com

C-GYVZ
November 15, 2019
WO#19-na

Cessna A185F
S/N: 18503341
TTAF: 1984.5

- Oil change carried out. Engine serviced with 10 qts AeroShell W100.
- Oil filter replaced P/N CH48108-1. Interior of old filter checked - no contaminants found.

THE MAINTENANCE DESCRIBED ABOVE HAS BEEN PERFORMED IN ACCORDANCE WITH THE APPLICABLE STANDARDS OF AIRWORTHINESS
M757016

AIR TIME AND

DATE	DAILY TOTAL		TOTAL AIR TIME SINCE MFG.		ENGINEERING RECORD
	HRS.	MIN.	HRS.	MIN.	NOTE: USE BOTH PAGES AND AS MANY LINES AS REQUIRED FOR COMPLETE
BROUGHT FORWARD			1984.	5	
2020.02.07	~~0~~		1984.	5	
			1984.	5	
2020.02.18	1.8		1986.	3	
			1986.	3	CARRIED FORWARD

1. Approving Civil Aviation Authority / Country	2. AUTHORIZED RELEASE CERTIFICATE	3. Form Tracking Number
TRANSPORT CANADA	**FORM ONE**	200010

4. Organization Name and Address	5. Work Order No.
GLIDESLOPE AEROSPACE INC. 374203 6th Line, Amaranth, Ontario L9W 0M6	C-GYVZ

6. Item	7. Description	8. Part Number	9. Quantity	10. Serial/ Batch Number	11. Status/ Work
ELT	406AF Compact	S1840501-01	1	2621051-0119	Inspected/ Tested

12. Remarks

ELT Certified IAW Kannad CMM LVL 2 (25-63-07 Rev 02)
BAT Due: Sep 2021
ELT Due: Jan 2021

13a. The items identified above were manufactured in conformity to:

- ☐ Approved design data and are in condition for safe operation.
- ☐ Non approved design data specified in Block 12.

14a. Certifies that unless otherwise specified in block 12, the work identified in block 11 and described in block 12 was performed in accordance with the *Canadian Aviation Regulations* indicated below:

- ☒ CAR 571.10 Maintenance Release.
- ☐ Other regulations specified in Block 12.

13b. Signature	13c. Approved organization number	14b. Signature	14c. Approved organization number
		Dean Ertel	AMO # 42-18

13d. Name	13e. Date (dd/mmm/yyyy)	14d Name	14e. Date (dd/mmm/yyyy)
		Dean Ertel	4-Feb-2020

Important: See notes on reverse side

INSTALLER RESPONSIBILITIES

This certificate does not constitute authority to install.Installers working in accordance with the national regulations of a country other than that specified in block 1 must ensure that their regulations recognize certifications from the country specified.Statements in blocks 13a or 14a do not constitute installation certification. In all cases, the technical record for the aircraft must contain an installation certification issued in accordance with the applicable national regulations before the aircraft may be flown.

1. Approving national aviation authority/country	2. AUTHORIZED RELEASE CERTIFICATE FORM ONE REV:02	3. Form tracking No.
TRANSPORT CANADA		2019- 12132

4. Approved organization name and address		5. Work order/contract/invoic
acorn welding	ACORN WELDING LTD. 10916-119TH ST. NW EDMONTON, AB T5H 3P4	Ph:1-888-388-8803 Ph:1-780-447-5955 Fax:1-780-447-5980 www.acornwelding.com	S/O:N/A P/O:N/A

6. Item	7. Description	8. Part Number	9. Qty	10.Serial/ Batch #	11. Status/Work
1	Riser Assy C-180/182/185	0750238-5AWL	1	IY780-2203	NEW

12.Remark

All New Material. Manufactured as per PDA 4-18. Replacement forCessna Part 0750238-5. Welded As Per AWS D17.1

EASA PART-145 Approved Repair Facility # EASA.145.7212

13a. Certifies that the items identified above were manufactured in conformity to:	14a.
☑ Approved design data and are in condition for safe operation ☐ Non approved design data specified in block 12.	☐ CAR 571.10 Maintenance Release ☐ Other regulations specified in block 12. Certifies that, except where otherwise specified in block 12, the work identified in block 11 and described in block 12was performed in accordance with CAR 571

13b. Authorized signature	13c. Approved Organization Number	14b. Authorized signature	14c. Approved Organization Number
	100-91		
13d. Name David Wagner QC-066	13e. Date (dd/mmm/yyyy) 19-Nov-19	14d. Name	14e. Date (dd/mmm/yyyy)

1. Installer must cross-check eligibility with approved data 1. This certificate does not constitute authority to install the part. 2. Where the installer works in accordance with the national regulations of an airworthiness authority other than the authority specified in block 1, the installer must ensure that his/her airworthiness authority accepts products or maintenance from the airworthiness authority specified in block 1. 3. Statements 13a and 14a do not constitute installation certification. In all cases the aircraft technical record must contain an installation certification, issued in accordance with the national regulations of the state of registry, before the aircraft may be flown.

W/O

P/N

1. Approving national aviation authority/country	2. AUTHORIZED RELEASE CERTIFICATE FORM ONE REV:02	3. Form tracking No.
TRANSPORT CANADA		2019-12709

4. Approved organization name and address		5. Work order/contract/invoice
acorn welding	ACORN WELDING LTD. 10916-119TH ST. NW EDMONTON, AB T5H 3P4	Ph:1-888-388-8803 Ph:1-780-447-5955 Fax:1-780-447-5980 www.acornwelding.com	S/O:N/A P/O:N/A

6. Item	7. Description	8. Part Number	9. Qty	10. Serial/ Batch #	11. Status/Work
1	Collector C-185	0750238-47AWL	1	IY988-958	NEW

12. Remark

All New Material. Manufactured as per PDA 04-7. Replacement for Cessna Part 0750238-47. Welded As Per AWS D17.1.

EASA PART-145 Approved Repair Facility # EASA.145.7212

13a. Certifies that the items identified above were manufactured in conformity to:	14a.
☑ Approved design data and are in condition for safe operation ☐ Non approved design data specified in block 12.	☐ CAR 571.10 Maintenance Release ☐ Other regulations specified in block 12. Certifies that, except where otherwise specified in block 12, the work identified in block 11 and described in block 12 was performed in accordance with CAR 571

13b. Authorized signature	13c. Approved Organization Number	14b. Authorized signature	14c. Approved Organization Number
	100-91		
13d. Name Ian McGaffey QC-060	13e. Date (dd/mmm/yyyy) 16-Dec-19	14d. Name	14e. Date (dd/mmm/yyyy)

Installer must cross-check eligibility with approved data 1. This certificate does not constitute authority to install the part 2. Where the installer works in accordance with the national regulations of an airworthiness authority other than the authority specified in block 1, the installer must ensure that his/her airworthiness authority accepts products or maintenance from the airworthiness authority specified in block 1. 3. Statements 13a and 14a do not constitute installation certification. In all cases the aircraft technical record must contain an installation certification, issued in accordance with the national regulations of the state of registry, before the aircraft may be flown.

W/O

P/N

1. Approving national aviation authority/country

TRANSPORT CANADA

2. **AUTHORIZED RELEASE CERTIFICATE**
FORM ONE
REV:02

3. Form tracking No.
2020- 4

4. Approved organization name and address

acorn welding

ACORN WELDING LTD. 10916-119TH ST. NW
EDMONTON, AB T5H 3P4

Ph:1-888-388-8803
Ph:1-780-447-5955
Fax:1-780-447-5980
www.acornwelding.com

5. Work order/contract/invoic
S/O:N/A
P/O:N/A

6. Item	7. Description	8. Part Number	9. Qty	10.Serial/ Batch #	11. Status/Work
1	Collector C-185	0750238-47AWL	1	IY988-962	NEW

12.Remark

All New Material. Manufactured as per PDA 04-7. Replacement for Cessna Part 0750238-47. Welded As Per AWS D17.1.

EASA PART-145 Approved Repair Facility # EASA.145.7212

13a. Certifies that the items identified above were manufactured in conformity to:

- [x] Approved design data and are in condition for safe operation
- [ ] Non approved design data specified in block 12.

14a.

- [ ] CAR 571.10 Maintenance Release
- [ ] Other regulations specified in block 12.

Certifies that, except where otherwise specified in block 12, the work identified in block 11 and described in block 12 was performed in accordance with CAR 571

13b. Authorized signature	13c. Approved Organization number	14b. Authorized signature	14c. Approved Organization number
	100-91		
13d. Name: Ian McGaffey QC-060	13e. Date (dd/mmm/yy): 06-Jan-20	14d. Name	14e. Date (dd/mmm/yy)

Installer must cross-check eligibility with approved data 1. This certificate does not constitute authority to install the part 2. Where the installer works in accordance with the national regulations of an airworthiness authority other than the authority specified in block 1, the installer must ensure that his/her airworthiness authority accepts products or maintenance from the airworthiness authority specified in block 1. 3. Statements 13a and 14a do not constitute installation certification. In all cases the aircraft technical record must contain an installation certification, issued in accordance with the national regulations of the state of registry, before the aircraft may be flown.

W/O

P/N

1. Approving national aviation authority/country	2. AUTHORIZED RELEASE CERTIFICATE	3. Form tracking No.
TRANSPORT CANADA	**FORM ONE** REV:02	**2019- 12135**

4. Approved organization name and address		5. Work order/contract/invoic
acorn welding	**ACORN WELDING LTD. 10916-119TH ST. NW EDMONTON, AB T5H 3P4**	Ph:1-888-388-8803 Ph:1-780-447-5955 Fax:1-780-447-5980 www.acornwelding.com	**S/O:N/A P/O:N/A**

6. Item	7. Description	8. Part Number	9. Qty	10.Serial/ Batch #	11. Status/Work
1	Riser Assy C-180/182/185	0750238-5AWL	1	IY780-2206	NEW

12.Remark

All New Material. Manufactured as per PDA 4-18. Replacement forCessna Part 0750238-5. Welded As Per AWS D17.1

EASA PART-145 Approved Repair Facility # EASA.145.7212

13a. Certifies that the items identified above were manufactured in conformity to:	14a.
☑ Approved design data and are in condition for safe operation ☐ Non approved design data specified in block 12.	☐ CAR 571.10 Maintenance Release ☐ Other regulations specified in block 12. Certifies that, except where otherwise specified in block 12, the work identified in block 11 and described in block 12was performed in accordance with CAR 571

13b. Authorized signature	13c. Approved Organization Number	14b. Authorized signature	14c. Approved Organization Number
	100-91		
13d. Name	**13e. Date (dd/mmm/yyyy)**	**14d. Name**	**14e. Date (dd/mmm/yyyy)**
David Wagner QC-066	19-Nov-19		

installer must cross-check eligibility with approved data 1. This certificate does not constitute authority to install the part 2. Where the installer works in accordance with the national regulations of an airworthiness authority other than the authority specified in block 1, the installer must ensure that his/her airworthiness authority accepts products or maintenance from the airworthiness authority specified in block 1. 3. Statements 13a and 14a do not constitute installation certification. In all cases the aircraft technical record must contain an installation certification, issued in accordance with the national regulations of the state of registry, before the aircraft may be flown.

W/O

P/N

R/H LEG

RECLAIMED AERO PARTS LTD.

PART DESCRIPTION: C-150/152 HEAVY DUTY GEAR LEG
P/N: 0741221-8 TT: U/K
S/N: 611541 C/W AXLE P/N 074102

AIRCRAFT INFORMATION
A/C REG: C-GLBW
A/C TTAF: 2705.3
A/C S/N: 31935
A/C MAKE/MODEL: C-180 1955

RECLAIMED AERO PARTS LTD.

PART DESCRIPTION: RIM/TIRE ASSY 6.00-6 RIM 6.50-6 TIRE
P/N: C163001-0103 TT: U/K
S/N: → ALT # 40-97A

AIRCRAFT INFORMATION
A/C REG: C-GLBW
A/C TTAF: 2705.3
A/C S/N: 31935
A/C MAKE/MODEL: C-180 ASS

RECLAIMED AERO PARTS LTD.

PART DESCRIPTION: RIM/TIRE ASSY 6.00-6 RIM 6.50-6 TIRE
P/N: C163001-0103 TT: U/K
S/N: → ALT 40-97A

AIRCRAFT INFORMATION
A/C REG: C-GLBW
A/C TTAF: 2705.3
A/C S/N: 31935
A/C MAKE/MODEL: C-180 1955

L/H LEG

RECLAIMED AERO PARTS LTD.

PART DESCRIPTION: C-150/152 HEAVY DUTY GEAR L.EG
P/N: 0741002-7 TT: U/K
S/N: 611513 C/W AXLE P/N 074102

AIRCRAFT INFORMATION
A/C REG: C-GLBW
A/C TTAF: 2705.3
A/C S/N: 31935
A/C MAKE/MODEL: C-180 1955

TEAM® Industrial Services
TISI Canada Inc.

MAGNETIC PARTICLE EXAMINATION REPORT - Portable

Client Name	Reclaimed Aeroparts Ltd.	**P.O. No.**	N/A	**Team Job No.**	50793671
Work Location	Reclaimed Aeroparts Shop - Hanmar, ON	**Client Job No.**	C-GLBW	**Report No.**	RSMT-164
Code / Specification / CED	IAW: N-AME-O 14/18	**Technique No.**	AC Continuous Fluorescent	**Date of Exam**	12/02/19
Acceptance / CED	Client QC - No cracks allowed	**Procedure**	MT.ASME.1 5200 Rev.2		

Part Description

Part / Assy No.	0741001-8 Cessna HD Gear Leg - R/H	**Material**	Steel	**Qty Inspected**	1	**Qty Accepted**	1
DWG No.	n/a	**Material Thickness**	n/a	**Heat No.**	n/a	**Qty Rejected**	0

Type of Fabrication

☐ Piping ☐ Vessel ☐ Tank ☐ Weld ☐ Casting ☐ Forging ☐ Plate ☑ Other ☑ Surface Acceptable for Inspection

Inspection Parameters

Magnetic Equipment: Magnaflux Y-1 **S/N:** 557590 **Calibration Date:** Due: June 1, 2020 ☑ AC ☐ DC ☑ Continuous ☐ Residual

Daily Yoke Verification ☑ Yes **Weight S/N:** 1107 **Yoke Leg Spacing:** 4" **Prod Spacing Amps:** n/a **Permanent Magnet Spacing:** n/a

Testing Medium	**Product:** Magnaflux 14AM	**Type:** ☑ Fluorescent ☐ Dry Powder ☐ Colour Contrast	**Colour:**	**Batch No.:** 18M16K	**Expiry Date:** Dec 2020		
Testing Medium	**Product:**	**Type:** ☐ Fluorescent ☐ Dry Powder ☐ Colour Contrast	**Colour:**	**Batch No.:**	**Expiry Date:**		
Bath Concentration	☑ Fluorescent ☐ Non-Fluorescent **ml / 100ml**		☑ Aerosol	**Part Temperature:** 20	☐ °F ☑ °C		
	Demagnetization ☑ Yes ☐ No		**Number of Oersteds:** n/a				

Lighting Equipment

Black Light Equipment used:	Labino S/N: 32032				**White Light Equipment used:**	n/a			
Black Light Meter S/N:	1964249	**Cal. Date:**	Aug 23/19	**Due Date:**	Feb 23/20	**Light Meter S/N:**	1964249	**Cal. Date:**	Aug 23/19	**Due Date:**	Feb 23/20
Black Light Sensor S/N:	1964249	**Cal. Date:**	Aug 23/19	**Due Date:**	Feb 23/20	**Light Sensor S/N:**	1964249	**Cal. Date:**	Aug 23/19	**Due Date:**	Feb 23/20
Black Light Intensity at the time of inspection:	4163 $\mu W / cm^2$					**White Light Intensity at the time of inspection:**	0 *fc*				
Min. Black Light intensity to be > 1000 $\mu W / cm^2$: ☑ at examination surface						**Min. White Light Intensity to be > 100 *fc* :** ☐ at examination surface					
☑ Ambient White Light in Darkened Area < 2 fc at inspection surface											

Inspection Scope

This report covers the Magnetic Particle Examination of the following:

Item Inspected: - 1x Cessna HD Gear Leg - R/H (includes Axle) P/N: 0741001-8 S/N: 811541

Aircraft Reg: C-GLBW

Aircraft S/N: 31935

Aircraft TTSN: 2705.3 hrs

Inspection Results

100% Fluorescent Magnetic Particle was carried out on the above gear leg. No rejectable indications were found at the time of inspection. The above items were found to be acceptable.

TISI #8003 S.C.B.

AMO#63-93

Signature and Certification

Technician	Ryan Sauve	**Reg. No.**	17642	**Client Final Acceptance**		**Signature**	**Date**
Signature		**Expiry Date**	07/15/21	**Authorized Inspector**		**Signature**	**Date**
Certification	**CGSB:** ☑ Level 2 ☐ Level 3	**SNT-TC-1A:**	☐ Level 2 ☐ Level 3	**CSA Supervisors Review**		**Signature**	**Date**

883 Alloy Place | Thunder Bay, ON | P7B 6G4 | TEL (807) 345-7447 | FAX (807) 344-0801

TEAM Industrial Services
TISI Canada Inc.

1. Approving Civil Aviation Authority/Country	2. AUTHORIZED RELEASE CERTIFICATE FORM ONE	3. Form Tracking No.
Transport Canada		50793671

4. Organizations Name and Address: TEAM INDUSTRIAL SERVICES (TISI CANADA INC)	5. Work Order/Contract/Invoice
TISI Canada Inc. 883 Alloy Place Thunder Bay Ontario P7B 6G4	C-GLBW

6. Item	7. Description	8. Part No.	9. Qty.	10. Serial/Batch No.	11. Status/Work
1.	RH Cessna Gear Leg and Axle	0741001-8	1	SN: 811541	Inspected/ Tested

12. Remarks

The identified parts were NDT inspected per work order instructions and requirements and resulted in no relevant indications observed. Refer to TISI Magnetic Particle inspection report # 50793671 / RSMT-164, dated 02/12/2019for details of this inspection.

13a. Certifies that the items identified above were manufactured in conformity to:

☐ Approved design data and are in a condition for safe operation.

☐ Non-approved design data specified in block 12.

14a. ■ CAR 571.10 Maintenance Release

☐ Other regulations specified in block 12

Certifies that unless otherwise specified in block 12, the work identified in block 11 and described in block 12, has been performed in compliance with the *Canadian Aviation Regulations*.

13b. Signature	13c. Approved Organization Number	14b. Signature	14c. Approved Organization Number
		TISI #8003 S.C.A.	AMO 63-93
13d. Name	**13e. Date (dd/mmm/yyyy)**	**14d. Name**	**14e. Date (dd/mmm/yyyy)**
		Murray Cook	02/12/2019

(Previously form 24-0078) Important: See notes

Installer Responsibilities

This certificate does not constitute authority to install.

Installers working in accordance with the national regulations of a country other than that specified in block 1 must ensure that their regulations recognize certifications from the country specified.

Statements in blocks 13a or 14a do not constitute installation certification. In all cases, the technical record for the aircraft must contain an installation certification issued in accordance with the applicable national regulations before the aircraft may be flown.

TEAM® Industrial Services
TISI Canada Inc.

MAGNETIC PARTICLE EXAMINATION REPORT - Portable

Client Name	Reclaimed Aeroparts Ltd.	**P.O. No.**	N/A	**Team Job No.**	50793671
Work Location	Reclaimed Aeroparts Shop - Hanmar, ON	**Client Job No.**	C-GLBW	**Report No.**	RSMT-165
Code / Specification / CED	IAW: N-AME-O 14/18	**Technique No.**	AC Continuous Fluorescent	**Date of Exam**	12/02/19
Acceptance / CED	Client QC - No cracks allowed	**Procedure**	MT.ASME.1 5200 Rev.7		

Part Description

Part / Assy No.	0741001-7 Cessna HD Gear Leg - L/H	**Material**	Steel	**Qty Inspected**	1	**Qty Accepted**	1
DWG No.	n/a	**Material Thickness**	n/a	**Heat No.**	n/a	**Qty Rejected**	0

Type of Fabrication

☐ Piping ☐ Vessel ☐ Tank ☐ Weld ☐ Casting ☐ Forging ☐ Plate ☑ Other ☑ Surface Acceptable for Inspection

Inspection Parameters

Magnetic Equipment: Magnaflux Y-1 **S/N:** 557590 **Calibration Date:** Due: June 1, 2020 ☑ AC ☐ DC ☑ Continuous ☐ Residual

Daily Yoke Verification ☑ Yes **Weight S/N:** 1107 **Yoke Leg Spacing:** 4" **Prod Spacing Amps:** n/a **Permanent Magnet Spacing:** n/a

Testing Medium	**Product:** Magnaflux 14AM	**Type:**	☑ Fluorescent	☐ Dry Powder	☐ Colour Contrast	**Colour:**	**Batch No.:** 18M16K	**Expiry Date:**	Dec 2020
Testing Medium	**Product:**	**Type:**	☐ Fluorescent	☐ Dry Powder	☐ Colour Contrast	**Colour:**	**Batch No.:**	**Expiry Date:**	
Bath Concentration	☑ Fluorescent ☐ Non-Fluorescent	**ml / 100ml**	☑ Aerosol			**Part Temperature:**	20	☐ °F	☑ °C
	Demagnetization ☑ Yes ☐ No		**Number of Oersteds:** n/a						

Lighting Equipment

Black Light Equipment used:	Labino S/N: 32032					**White Light Equipment used:**	n/a		
Black Light Meter S/N:	1964249	**Cal. Date:**	Aug 23/19	**Due Date:**	Feb 23/20	**Light Meter S/N:**	1964249	**Cal. Date:**	Aug 23/19	**Due Date:**	Feb 23/20
Black Light Sensor S/N:	1964249	**Cal. Date:**	Aug 23/19	**Due Date:**	Feb 23/20	**Light Sensor S/N:**	1964249	**Cal. Date:**	Aug 23/19	**Due Date:**	Feb 23/20
Black Light Intensity at the time of inspection:	4163 $\mu W / cm^2$					**White Light Intensity at the time of inspection:**	0 *fc*				
Min. Black Light Intensity to be > 1000 $\mu W / cm^2$: ☑ at examination surface						**Min. White Light Intensity to be > 100 *fc* :** ☐ at examination surface					
☑ Ambient White Light in Darkened Area < 2 fc at inspection surface											

Inspection Scope

This report covers the Magnetic Particle Examination of the following:

Item Inspected: - 1x Cessna Gear Leg - L/H (includes Axle) P/N: 0741001-7 S/N: 811513

Aircraft Reg: C-GLBW

Aircraft S/N: 31935

Aircraft TTSN: 2705.3 hrs

Inspection Results

100% Fluorescent Magnetic Particle was carried out on the above gear leg. No rejectable indications were found at the time of inspection. The above items were found to be acceptable.

TISI #8003 S.C.B

AMO#63-93

Signature and Certification

Technician	Ryan Sauve	**Reg. No.**	17642	**Client Final Acceptance**		**Signature**	**Date**
Signature		**Expiry Date**	07/15/21	**Authorized Inspector**		**Signature**	**Date**
Certification	**CGSB:** ☑ Level 2 ☐ Level 3	**SNT-TC-1A:**	☐ Level 2 ☐ Level 3	**CSA Supervisors Review**		**Signature**	**Date**

TEAM Industrial Services
TISI Canada Inc.

1. Approving Civil Aviation Authority/Country	2. AUTHORIZED RELEASE CERTIFICATE FORM ONE	3. Form Tracking No.
Transport Canada		50793671
4. Organizations Name and Address: TEAM INDUSTRIAL SERVICES (TISI CANADA INC) TISI Canada Inc. 883 Alloy Place Thunder Bay Ontario P7B 6G4		5. Work Order/Contract/Invoice C-GLBW

6. Item	7. Description	8. Part No.	9. Qty.	10. Serial/Batch No.	11. Status/Work
1.	LH Cessna Gear Leg and Axle	0741001-7	1	SN: 811513	Inspected/ Tested

12. Remarks

The identified parts were NDT inspected per work order instructions and requirements and resulted in no relevant indications observed. Refer to TISI Magnetic Particle inspection report # 50793671 / RSMT-165, dated 02/12/2019for details of this inspection.

13a. Certifies that the items identified above were manufactured in conformity to:

☐ Approved design data and are in a condition for safe operation.

☐ Non-approved design data specified in block 12.

14a. ■ CAR 571.10 Maintenance Release

☐ Other regulations specified in block 12

Certifies that unless otherwise specified in block 12, the work identified in block 11 and described in block 12, has been performed in compliance with the *Canadian Aviation Regulations*.

13b. Signature	13c. Approved Organization Number	14b. Signature	14c. Approved Organization Number
		TISI #8003 S.C.A.	AMO 63-93
13d. Name	13e. Date (dd/mmm/yyyy)	14d. Name	14e. Date (dd/mmm/yyyy)
		Murray Cook	02/12/2019

(Previously form 24-0078) Important: See notes

Installer Responsibilities

This certificate does not constitute authority to install.

Installers working in accordance with the national regulations of a country other than that specified in block 1 must ensure that their regulations recognize certifications from the country specified.

Statements in blocks 13a or 14a do not constitute installation certification. In all cases, the technical record for the aircraft must contain an installation certification issued in accordance with the applicable national regulations before the aircraft may be flown.

INSPECTION, REPAIRS & REPLACEMENT ENTRIES. DRAW A DIAGONAL LINE THROUGH ANY UNUSED LINES IN DATE AND TIME COLUMNS.	SIGNATURE	LICENCE NUMBER

CENTRAL AERO

centralaero@rogers.com

C-GYVZ — Cessna A185F
February 7, 2020 — S/N 18503341
WO#20-P04 — TTAF: 1984.5

- Annual inspection carried out IAW CAR STD 625 appendix B&C with reference to Cessna checksheets
- Differential compression: 1.68/80 2.68/80 3.68/80 4.70/80 5.70/80 6.71/80
- Spark plugs replaced with new (12) P/N URHB32E
- Induction filter replaced P/N BA8103-1
- Engine washed down, ground run and leak checked - all parameters normal, no leaks found
- Exhaust collectors and risers replaced with new. (2ea) P/Ns 070238-47AWL & 0702385AWL - serial numbers listed on associated Form1 documentation.
- Replaced plenum heat shield at #2 cylinder P/N MC0750143-1.
- Lower fuel strainer o-rings replaced P/Ns MS29513-111 & -138. Injector screen checked and cleaned.
- Flap chafe plugs replaced (27) P/N S1093-1.
- Installed new stall reed P/N S2488-1. Stall horn checked - serviceable
- Replaced broken ELT antenna P/N AV-200B
- Landing light wiring replaced on front cowl from plug to bulbs using 12ga tefzel wire, AMP 31902 terminals & S1635-2 pin connectors.
- Removed EDO3500 amphibious floats and installed landplane gear - capped hydraulic fittings, removed wires from bus to power pack related breaker switches and secured all cabling.
  - MLG legs, axles, wheel and brake components as removed from C-GLBW - see related NDT release paperwork and tags. Wheels disassembled, cleaned and inspected - serviceable. Lubricated wheel bearings with AeroShell22 and re-assembled all.
  - STC#SA01636AE ABI installation of Alaskan Bushwheel tailwheel assembly ABI-3450-00 carried out IAW Installation Instructions ABI 3400 - ABI 3450 - ABI 3450-23 ICA revision A. Aircraft is listed on the AML. ICAs incorporated with technical records. No further supplements required.
  - Set MLG wheel caster and toe to MM specifications.
  - Brakes bled with MIL-PRF-H5606.
  - Taxi tests carried out - satisfactory
- Compass swing carried out:

FOR	000	030	060	090	120	150
STEER	001	031	062	091	120	149
FOR	180	210	240	270	300	330
STEER	182	212	241	271	301	332
C-GYVZ February 7, 2020						

- ELT removed for recertification
- Tachometer checked - within limits
- Fire extinguisher checked, gauge reads green, mount is secure - OK for service
- AD CF-90-03R2 exhaust type cabin heat inspection C/W - no defects found
- AD 2011-10-09 seats slipping C/W - within spec, serviceable
- AD CF-73-05 rudder pedal torque tube C/W - no defects noted
- Weight & Balance and Equipment List amended for landing gear changeover, configurations set for future usage.

THE MAINTENANCE DESCRIBED ABOVE HAS BEEN PERFORMED IN ACCORDANCE WITH THE APPLICABLE STANDARDS OF AIRWORTHINESS

M757016

CENTRAL AERO

centralaero@rogers.com

C-GYVZ — Cessna A185F
February 18, 2020 — S/N 18503341
WO#20-P04A — TTAF:

- ELT installed, armed and satisfactory self test carried out following recertification at Glideslope Aerospace Form1#200010.

THE MAINTENANCE DESCRIBED ABOVE HAS BEEN PERFORMED IN ACCORDANCE WITH THE APPLICABLE STANDARDS OF AIRWORTHINESS

M757016

AIR TIME AND

DATE	DAILY TOTAL		TOTAL AIR TIME SINCE MFG.		ENGINEERING RECORD
	HRS.	MIN.	HRS.	MIN.	NOTE: USE BOTH PAGES AND AS MANY LINES AS REQUIRED FOR COMPLETE
BROUGHT FORWARD			1986	3	
2020.05.29	16	5	2002	8	
			2002	8	
2020.06.08		0	2002	8	
			2002	8	
					CARRIED FORWARD

ENGINEERING RECORD

INSPECTION, REPAIRS & REPLACEMENT ENTRIES. DRAW A DIAGONAL LINE THROUGH ANY UNUSED LINES IN DATE AND TIME COLUMNS.	SIGNATURE	LICENCE NUMBER

CENTRAL AERO
centralaero@rogers.com

C-GYVZ — Cessna A185F
May 29, 2020 — S/N: 18503341
WO#20-na — TTAF: 2002.8

- Landplane gear removed. EDO3500 amphibious float installed.
- General float inspection carried out - no defects found
- Cycled gear several times - no faults found
- Brakes bled with MIL-PRF-H5606
- LH nose oleo re and re. Disassembled, cleaned and inspected - all components found serviceable. Re-assembled with new o-rings throughout and serviced with MIL-PRF-H5606 and Nitrogen.
- RH nose oleo serviced with Nitrogen.
- Tire pressures set
- Replaced (4) VGs as needed using manufacturers repair kit
- Dual inspection carried out on rudder interconnect assembly/rigging/safety

CONTROL SYSTEMS AFFECTED HAVE BEEN INSPECTED FOR CORRECT INSTALLATION, RANGE OF MOVEMENT, SAFETY AND SENSE OF OPERATION
PA842835

THE MAINTENANCE DESCRIBED ABOVE HAS BEEN PERFORMED IN ACCORDANCE WITH THE APPLICABLE STANDARDS OF AIRWORTHINESS
M757016

CENTRAL AERO
centralaero@rogers.com

C-GYVZ — Cessna A185F
June 8, 2020 — S/N: 18503341
WO#20-na — TTAF: 2002.8

- Starter adapter replaced with P/N 643259A18 S/N CAM20-065 overhauled by Canadian Aero Manufacturing WO#20-065.
- AD 93-05-06 ACS/Gerdes ignition switches C/W - ACS SB92-01 carried out, service kit P/N A-3650-2 installed, switch lubricated and diode installed on starter contactor.

THE MAINTENANCE DESCRIBED ABOVE HAS BEEN PERFORMED IN ACCORDANCE WITH THE APPLICABLE STANDARDS OF AIRWORTHINESS
M757016